CITY OF ANNA, TEXAS

ORDINANCE NO. 859-2020

AN ORDINANCE OF THE CITY OF ANNA, TEXAS AMENDING THE ANNA CITY CODE OF ORDINANCES BY AMENDING CHAPTER 4, (BUILDING REGULATIONS), BY REPEALING ARTICLE 4.04, (PROPERTY MAINTENANCE CODE) AND REPLACING SAID ARTICLE WITH A NEW ARTICLE 4.04 (PROPERTY MAINTENANCE CODE) BY ADOPTING THE 2018 EDITION OF THE INTERNATIONAL PROPERTY MAINTENANCE CODE WITH CERTAIN AMENDMENTS THERETO; PROVIDING A SAVINGS CLAUSE; PROVIDING A SEVERABILITY CLAUSE; PROVIDING A REPEALING CLAUSE; PROVIDING A PENALTY CLAUSE; PROVIDING AN EFFECTIVE DATE AND FOR THE PUBLICATION OF THE CAPTION HEREOF.

WHEREAS, the City of Anna's Property Maintenance Code is intended to be updated periodically; and

WHEREAS, the last update to the City of Anna's Property Maintenance Code was in 2005; and

WHEREAS, the International Code Council (ICC) has developed a set of comprehensive and coordinated international model codes (known generally as the "International Codes") which includes the International Property Maintenance Code; and

WHEREAS, the 2018 Edition of the International Property Maintenance Code has been reviewed by City staff; and

WHEREAS, the City Council of the City of Anna has determined that it is in the best interest of Anna Neighbors to repeal Article 4.04 (Property Maintenance Code) of the Anna City Code of Ordinance ("Anna Code") and to replace said article with a new Article 4.04 (Property Maintenance Code) by adopting by reference the 2018 Edition of the International Property Maintenance Code, with certain amendments set forth in the attached Exhibit A.

NOW, THEREFORE, BE IT ORDAINED BY THE CITY COUNCIL OF THE CITY OF ANNA, TEXAS:

Section 1. Recitals Incorporated.

The above referenced recitals are incorporated herein as if set forth in full for all purposes.

Section 2. Amendment to Chapter 4, (Building Regulations), Article 4.04, (Property Maintenance Code) of the Anna Code.

Article 4.04, (Property Maintenance Code) of the Anna Code is hereby repealed in its entirety and replaced with a new Property Maintenance Code by adopting the 2018 International Property Maintenance Code, Including Appendix A, copyrighted by the International Code Council, Inc., with the deletions and amendments set forth in Exhibit "A", attached hereto and incorporated herein for all purposes. In accordance with the foregoing, Article 4.04 (Property Maintenance Code) of the Anna Code shall hereafter read as follows:

ARTICLE 4.04 PROPERTY MAINTENANCE CODE*

The 2018 edition of the International Property Maintenance Code has been adopted. Copies of the code, and certain amendments thereto, are on file in the office of the city secretary and said code is hereby adopted by

DRAFT

reference and designated as the property maintenance code of the city, the same as though such code were copied at length herein.

(Ordinance _____ adopted 3/26/20)

* **State law references**–Authority of municipality to regulate dangerous and substandard structures, V.T.C.A., Local Government Code, sec. 214.001 et seq.; municipal regulation of sanitation, V.T.C.A., Health and Safety Code, ch. 342.

Section 3. Adoption of Amendments.

Amendments to the 2018 International Property Maintenance Code are hereby adopted as set forth in the attached Exhibit A, which said exhibit shall be kept on file in the City Secretary's office along with a copy of said code.

Section 4. Savings, Severability, and Repealing Clauses.

All ordinances of the City in conflict with the provisions of this ordinance are repealed to the extent of that conflict. If any provision of this ordinance shall be held to be invalid or unconstitutional, the remainder of such ordinance shall continue in full force and effect the same as if such invalid or unconstitutional provision had never been a part hereof. The City declares that it would have passed this ordinance, and each section, subsection, clause, or phrase thereof irrespective of the fact that any one or more sections, subsections, sentences, clauses, and phrases be declared unconstitutional or invalid.

Section 5. Penalty Clause.

Any violation of any of the terms of this ordinance, whether denominated in this ordinance as unlawful or not, shall be deemed a misdemeanor. Any person convicted of any such violation shall be fined in an amount not to exceed $2,000 for each incidence of violation or the highest amount allowed by law, whichever is less. Each violation is considered a separate offense and will be punished separately.

Section 6. Publication of the Caption Hereof and Effective Date.

This ordinance shall be in full force and effective from and after its passage and upon the posting and/or publication, if required by law, of its caption and the City Secretary is hereby directed to implement such posting and/or publication.

PASSED by the City Council of the City of Anna, Texas on this 26th day of May 2020.

APPROVE: **ATTEST:**

CITY OF ANNA TEXAS

Carrie L. Land

Mayor Nate Pike **City Secretary Carrie Land**

859-2020

DRAFT

Exhibit A
CITY OF ANNA AMENDMENTS
2018 INTERNATIONAL PROPERTY MAINTENANCE CODE

The following amendments of the 2018 International Property Maintenance Code are hereby approved and adopted *(i.e.* deletions evidenced by strikethrough and additions evidenced by underline):

Chapter 1. Scope and Administration of the 2018 International Property Maintenance Code is amended as follows:

Section 101 General of the 2018 International Property Maintenance Code is amended as follows:

Section 101.1 Title. These regulations shall be known as the **International** Property Maintenance Code of **the City of Anna, Texas,** hereinafter referred to as "this code".

Section 102 Applicability of the 2018 International Property Maintenance Code is amended as follows:

Section 102.3 Application of other codes. Repairs, additions or alterations to a structure, or changes of occupancy, shall be done in accordance with the procedures and provisions of the International Building Code, International Existing Building Code, International Energy Conservation Code, International Fire Code, International Fuel Gas Code, International Mechanical Code, International Residential Code, International Plumbing Code, and NFPA 70. Nothing in this code shall be construed to cancel, modify, or set aside any provision of the **City of Anna Zoning and Subdivision Regulation Ordinances, as they currently exist or may be amended.**

Section 102.7 Referenced codes and standards. The codes and standards referenced in this code shall be **those that are listed in Chapter 8 and considered part of the requirements of this code to the prescribed extent of each such reference and as further regulated in Section 102.7.1 and 102.7.2 and application provisions of the Anna City Code of Ordinances including without limitation of Chapter 9 (Planning and Development Regulations)a, and the Building, Electrical, Mechanical, Plumbing, Fire and Health Codes adopted by the City of Anna, as they currently exist or may be amended. Where differences occur between provisions of this code and the above-referenced codes and regulations, the most restrictive provision shall apply. To the extent of any conflict between this code and state law the more restrictive provision shall apply; provided, however, that state law shall govern to the extent this code conflicts with state law provisions governing mandatory procedures for abatment of substandard conditions or other violations of this code including definitions, notices, hearings, appeals, liens and other procedures or enforcement matters and any such state law provisions are deemed to be incorporated herein and enforceable as if set forth in full.**

Section 103 Department of Property Maintenance Inspection of the 2018 International Property Maintenance Code is amended as follows:

Section 103.5 Fees. The fees for activates and services performed by the department in carrying out its responsibilities under this code shall be **as indicated in Appendix A (Fee Schedule) of the Anna City Code of Ordinances.Section 104 Duties and Powers of the Code Official** of the 2018 International Property Maintenance Code is amended as

Draft

follows:

Section 104.1 General. The code official or City Manager's designee(s) is hereby authorized and directed to enforce the provisions of this code. The code official shall have the authority to render interpretations of this code and to adopt policies and procedures in order to clarify the application of its provisions. Such interpretations, policies, and procedures shall be in compliance with the intent and purpose of this code. Such policies and procedures shall not have the effects of waiving requirements specifically provided for in this code.

Section 107 Notices and orders of the 2018 International Property Maintenance Code is amended as follows:

Section 107.1 Notice to person responsible. Whenever the code official determines that there has been a violation of this code or has grounds to believe that a violation has occurred, notice shall be given in the manner prescribed in Sections 107.2 and 107.3 to the person responsible for the violation as specified in this code. Notices for condemnation procedures shall comply with Section 108.3. **In the notice provided for the city shall have the right to inform the property owner or agent having charge that if he or she commits another violation of the same kind of nature any time within one year from original notice, the city may institute the appropriate proceedings at law or to correct or abate such violations without further notice at the owner's expense and assess the expense against the property.**

Section 107.3 Method of Service. Such notice shall be deemed to be properly served if a copy thereof is: delivered personally, or sent by certified or first-class mail addressed to the last known address, **or sent by certified or first-class mail addressed to the property owner at the property owner's address as recorded in the appraisal district records of the appraisal district in which the property is located, or sent by certified or first-class mail addressed to the person responsible for the violation.** If the notice is returned showing the letter was not delivered, **the validity of the notice is not affected, and is considered as delivered, and** a copy thereof shall be posted in a conspicuous place in or about the structure affected by such notice **or a stake driven into the ground on the property to which the violation relates**.

Section 108 Unsafe Structures and Equipment of the 2018 International Property Maintenance Code is amended as follows:

Section 108.1.1 Unsafe Structures. An unsafe structure is one that is found to be dangerous to the life, health, property or safety of the public or the occupants of the structure by not providing minimum safeguards to protect or warn occupants in the event of fire, or because such structure contains unsafe equipment or is so damaged, decayed, dilapidated, structurally unsafe or of such faulty construction or unstable foundation, that partial or complete collapse is possible.

Notwithstanding anything in this Section to the contrary, the City expressly retains all statutory powers and rights to address unsafe structures.

Section 111 Means of appeal of the 2018 International Property Maintenance Code is deleted in its entirety and replaced as follows:

Section 111.1 Means of Appeal. The Zoning Board of Adjustment, created by the City of Anna, as it currently exists or may be amended, will serve as the means of appeal.

DRAFT

Section 112 Stop Work Order of the 2018 International Property Maintenance Code is amended as follows:

Section 112.4 Failure to Comply. Any person who shall continue any work after having been served with a stop work order, except such work as that person is directed to perform to remove a violation or unsafe condition, shall be liable of a fine of not less than **$200** dollars or more than **$2,000** dollars **for each incidence of violation or the highest amount allowed by law, whichever is less. Each violation is considered a separate offense and will be punished separately.**

Chapter 2. Definitions of the 2018 International Property Maintenance Code is amended as follows:

Section 202 General Definitions of the 2018 International Property Maintenance Code is amended to change or add the definitions as follows:

Garbage. The animal or vegetable waste resulting from the handling, preparation, cooking and consumption of food **and all decayable waster or rubbish**.

Motor vehicle. A vehicle that is self-propelled.

Open Storage. The outside storage of goods, materials, merchandise and equipment on a lot or tract of land including the placement of storage containers such as vaults, shipping containers or other vehicles for storage.

Portable Storage Units. A container, storage unit, shed-like container or other portable structure that can or is used for the storage of personal property of any kind. A commonly accepted name for these storage containers is PODs, an acronym for portable on-demand storage.

Chapter 3. General Requirements of the 2018 International Property Maintenance Code, the following definitions are added follows:

Section 302 Exterior Property Areas of the 2018 International Property Maintenance Code is amended as follows:

Section 302.3 Sidewalks and driveways. Sidewalks, walkways, stairs, driveways, **parking lots**, parking spaces and similar areas shall be kept in a proper state of repair, maintained free from hazardous conditions. **Repairs and maintenance shall be the responsibility of the property owner to maintain free from obstructions, trip hazards or dilapidated conditions from the edge of the street or alley pavement.**

Section 302.4 Weeds of the 2018 International Property Maintenance Code shall be deleted in its entirety and replaced as follows:

Section 302.4 Weeds.

Weeds shall be defined as all grasses, annual plants and vegetation, other than trees or shrubs; provided, however, this term shall not include cultivated flowers and gardens. All premises and exterior property including

DRAFT

any portion of the public right-of-way abutting a property owner's property, any portion of any street or alley to the center thereof, and parking strips, bordering a property owner's lot or lots, land or lands, shall be maintained free from weeds or plant growth in excess of 8 inches.

For large tracts involving property more than five (5) acres the following provisions shall apply.

a. Properties located adjacent to improved properties shall be maintained at less than eight (8) inches in height to a depth of fifty (50) feet along property lines that abut a public right-of-way, public property or adjacent improved property.

b. Properties located adjacent to unimproved properties shall be maintained at less than twelve (12) inches in height to a depth of twenty-five (25) feet along property lines that abut a public right-of-way or public property.

All noxious weeds shall be prohibited. Dead weeds must be removed and replaced as required.

Upon failure of the owner or agent having charge of a property to cut and destroy weeds after service of a notice of violation, they shall be subject to prosecution in accordance with Section 106.3 and as prescribed by the authority having jurisdiction. Upon failure to comply with the notice of violation, any duly authorized employee of the jurisdiction or contractor hired by the jurisdiction shall be authorized to enter upon the property in violation and cut and destroy the weeds growing thereon, and the costs of such removal shall be paid by the owner or agent responsible for the property.

Weeds in excess of forty-eight (48) inches may be immediately abated without notice. Notice shall be given not later than the tenth day after the city abates the violation. The City may assess expenses and create liens in the same manner and subject to the same conditions as set forth in Section 6 above.

Section 302.4.1 Trees and vegetation. Tree branches and vegetation shall be trimmed so that no branches or vegetation hang, overhang, grow into or grow over any street or alley below fourteen feet (14') above the surface of the street or alley and so that no branches or vegetation hang, overhang, grow into or grow over any sidewalk below seven feet (7') above the surface of the sidewalk. All dead, diseased or dangerous trees, limbs or vegetation that hang, overhang, grow into or grow over a public right-of-way shall be removed and replaced as required. When such growth exists, it shall be deemed a nuisance and a danger to public safety. It shall be the duty of the property owner to abate the nuisance if the set minimum clearances are not maintained. Upon failure of the property owner or agent having charge of a property to and maintain minimum clearances, after service of a notice of violation, shall be subject to prosecution in accordance with Section 106.3 and as prescribed by the authority having jurisdiction. Upon failure to comply with the notice of violation, any duly authorized employee of the jurisdiction or contractor hired by the jurisdiction shall be authorized to enter upon the property in violation and trim the trees and vegetation growing thereon, and the costs of such removal shall be paid by the owner or agent responsible for the property.

DRAFT UNOFFICIAL

Section 302.7.1 Fences. All fences shall be maintained in sound condition, free of damage, breaks, or missing structural members. Areas that are leaning, buckling, sagging or deteriorating shall be repaired or replaced with a material compatible with the undamaged portions of the fence. Where fence has been previously painted, and there are areas of chipping, peeling, scaling or missing paint equal to or greater than 20 percent of the fence surface, then such surface shall be repainted or shall be stripped of all paint.

Section 302.8.1 Parking of motor vehicles. It shall be prohibited for a motor vehicle of any kind to be parked or stored on any residential lot except when parked on an improved surface intended to be used for the parking or storing of motor vehicles and designed to the City of Anna's specifications. The improved surface shall consist of material treated or covered with brick, brick pavers, block, block pavers, stone, concrete, concrete pavers, asphalt or decorative rock, and the improved surface must completely extend the entire length and width of the motor vehicle.

Section 302.8.2 Motor vehicle waste. It shall be prohibited for a motor vehicle to leak or deposit waste onto a private drive or public street. Waste includes oils, greases and other fluids.

Section 302.10 Obstruction of sidewalks and parkway areas. It is an offense for a property owner, owner's representative, or person leasing, occupying or having control, custody or care of property to allow the obstruction or encumbrance, entirely or in part, any portion of any sidewalk or parkway area in the city with any item, whether temporary or permanent, including, but not limited to, lumber, boxes, firewood, posts, fences and motor vehicles, unless expressly authorized by city ordinance. Exempt from this prohibition are trees, shrubs, landscaping and mailboxes located in the parkway area that are maintained in compliance with other city ordinances, rules and regulations.

Section 302.11 Open storage prohibited. It is an offense for a property owner, owner's representative, or person leasing, occupying or having control, custody or care of property to allow open storage, as defined in subsection 202 of this ordinance, in a residential district.

Section 302.12 Other exterior property conditions. It shall be unlawful for any person to allow, permit, conduct or maintain objectionable, unsightly or unsanitary conditions, items, situations or events on any property except for premises that are specifically approved for such uses.

1) Furniture, appliance or other items left outside that were or are not intended for outdoor use.
2) Building materials or any item by itself used in construction that is not serving its intended purpose where there is not an active building permit.
3) Clothing, papers, broken glass, scrap materials, pipe barrels, piles or stacks of unused brick or stone, uninstalled fence and/or fence materials.
4) Brush, trash, wood piles, fallen trees or large parts of trees such as the trunk or main branches, dead trees or other vegetation.
5) Lawn equipment in whole or in part where such is kept outside and unprotected from the elements.

DRAFT

6) Unlicensed and/or unregistered and/or inoperable motor vehicles.

7) Parts typically associated with trucks, cars, motorcycles or other motor vehicles that includes but is not limited to body parts, tires, wheels, batteries, upholstered items, engines, drive train components and other such items.

8) Construction equipment in whole or in part where the equipment is not being used for its intended purpose on the property where parked or stored other than where permitted within the approved zoning district and subject to conditions thereof.

9) Where outside storage and/or display is allowed, the accumulation of trash, debris and items or material that is not orderly stacked.

10) The placing or accumulation of any material or item in any area of a property that does or could provide nesting, harborage or feeding for vermin or pest, or that could negatively affect the environment's ecological system from runoff areas emitting an odor or odors for longer than 24 hours that a person of reasonable sensibilities may distinguish from ambient odors, seepage of fuels, oils, chemical or organic compounds in the soils and similar such events.

11) The accumulation of materials that emit any gases, noxious fumes or odors to such extent that the same or any of them shall by reason of such offensive odors become a source of endangerment to the health, safety and welfare to immediate surrounding property or to persons living or passing in the vicinity within the City of Anna.

Section 302.13 Portable Storage Units. Before placing a portable storage unit on property, (PODs), a valid permit from the city is required. Portable storage units are only allowed on improved surfaces as defined in section 302.8.1. Placement on city streets or right-of-way is prohibited. The maximum allowable size for a portable storage container in a residential district is 160 square feet with an overall length not to exceed 20 feet. No more than two (2) portable storage units shall be located on a single residential lot or parcel of land. A portable storage unit may only be utilized in a residential district for a period not to exceed 30 days in any 360-day period. The Code Official may grant an extension of the placement of a portable storage unit in a residential district if the property owner demonstrates that extenuating circumstance exist. Extenuating circumstances shall include but are not limited to, natural disasters, fire or other events of a similar magnitude.

Section 304 Exterior Structure of the 2018 International Property Maintenance Code is amended as follows:

Section 304.3 Premises identification. Buildings shall have approved address numbers placed in position to be plainly legible and visible from the street or road fronting the property **and visible from the alley.** These numbers shall contrast with their background. Address numbers shall be Arabic numerals or alphabet letters. Numbers shall be not less than 4 inches (102 mm) in height with a minimum stroke width of 0.5 inch (12.7mm).

Section 304.14 Insect Screens. During the period from October 1 to May 31, every door, window, and other outside opening required, (remainder unchanged).

Chapter 6. Mechanical and Electrical Requirements of the 2018 International Property Maintenance Code is amended as follows:

Section 602 Heating Facilities of the 2018 International Property Maintenance Code is

DRAFT

amended as follows:

Section 602.3 Heat Supply. Every owner or operator of any building who rents, leases or lets one or more dwelling units or sleeping units on terms, either expressed or implied, to furnish heat to the occupants thereof shall supply heat during the period from **October 1 to May 31** ,(remainder unchanged).

Section 602.4 Occupiable workspaces. Indoor occupiable workspaces shall be supplied with heat during the period from October 1 to May 31, (remainder unchanged).

PUBLICATE

100879785

2018

INTERNATIONAL CODES

IPMC®

A Member of the International Code Family

DIGITAL FILE

INTERNATIONAL
PROPERTY MAINTENANCE CODE®

ICC
INTERNATIONAL CODE COUNCIL®

100879786

2018

INTERNATIONAL CODES®

2018 I-CODE BONUS OFFER

Get a **free 45-day online subscription** to ICC's *premiumACCESS*™ 2018 I-Codes Complete Collection. Test drive many powerful, time-saving tools available to you from *premiumACCESS*. To activate your bonus, visit **www.iccsafe.org/codebonus**.

IPMC®

A Member of the International Code Family®

LICATE

INTERNATIONAL **PROPERTY MAINTENANCE** CODE®

INTERNATIONAL CODE COUNCIL®

Copyright © 2017 ICC. ALL RIGHTS RESERVED. Licensed by [illegible] ([illegible]) (3 Order Number [illegible] on [illegible] pursuant to License Agreement with ICC. No further reproduction, no further reproductions by any third party, or distribution authorized. Single user only, copying and networking prohibited. ANY UNAUTHORIZED REPRODUCTION OR DISTRIBUTION IS A VIOLATION OF THE FEDERAL COPYRIGHT ACT AND THE LICENSE AGREEMENT, AND SUBJECT TO CIVIL AND CRIMINAL PENALTIES THEREUNDER.

100879786

2018 International Property Maintenance Code®

Date of First Publication: August 31, 2017

First Printing: August 2017
Second Printing: April 2018

ISBN: 978-1-60983-748-8 (soft-cover edition)

COPYRIGHT © 2017
by
INTERNATIONAL CODE COUNCIL, INC.

ALL RIGHTS RESERVED. This 2018 *International Property Maintenance Code®* is a copyrighted work owned by the International Code Council, Inc. Without advance written permission from the copyright owner, no part of this book may be reproduced, distributed or transmitted in any form or by any means, including, without limitation, electronic, optical or mechanical means (by way of example, and not limitation, photocopying or recording by or in an information storage retrieval system). For information on use rights and permissions, please contact: Publications, 4051 Flossmoor Road, Country Club Hills, IL 60478. Phone 1-888-ICC-SAFE (422-7233).

Trademarks: "International Code Council," the "International Code Council" logo, "ICC," the "ICC" logo, "International Property Maintenance Code," "IPMC" and other names and trademarks appearing in this book are trademarks of the International Code Council, Inc., and/or its licensors (as applicable), and may not be used without permission.

T023768

PRINTED IN THE USA

PUBLICATION

INTERNATIONAL CODE COUNCIL®

Copyright © 2017 ICC. ALL RIGHTS RESERVED. Accessed by Ashley Stathatos (astathatos@annatexas.gov), (-) Order Number #100879786 on May 06, 2020 08:14 AM (PDT) pursuant to License Agreement with ICC. No further reproduction, no further reproductions by any third party, or distribution authorized. Single user only, copying and networking prohibited. ANY UNAUTHORIZED REPRODUCTION OR DISTRIBUTION IS A VIOLATION OF THE FEDERAL COPYRIGHT ACT AND THE LICENSE AGREEMENT, AND SUBJECT TO CIVIL AND CRIMINAL PENALTIES THEREUNDER.

100879786

PREFACE

Introduction

The *International Property Maintenance Code*® (IPMC®) establishes minimum requirements for the maintenance of existing buildings through model code regulations that contain clear and specific property maintenance and property improvement provisions. This 2018 edition is fully compatible with all of the *International Codes*® (I-Codes®) published by the International Code Council® (ICC®), including the *International Building Code*®, *International Energy Conservation Code*®, *International Existing Building Code*®, *International Fire Code*®, *International Fuel Gas Code*®, *International Green Construction Code*® , *International Mechanical Code*®, *International Plumbing Code*®, *International Private Sewage Disposal Code*®, *International Residential Code*®, *International Swimming Pool and Spa Code*®, *International Wildland-Urban Interface Code*®, *International Zoning Code*® and *International Code Council Performance Code*®.

The I-Codes, including this *International Property Maintenance Code*, are used in a variety of ways in both the public and private sectors. Most industry professionals are familiar with the I-Codes as the basis of laws and regulations in communities across the U.S. and in other countries. However, the impact of the codes extends well beyond the regulatory arena, as they are used in a variety of nonregulatory settings, including:

- Voluntary compliance programs such as those promoting sustainability, energy efficiency and disaster resistance.
- The insurance industry, to estimate and manage risk, and as a tool in underwriting and rate decisions.
- Certification and credentialing of individuals involved in the fields of building design, construction and safety.
- Certification of building and construction-related products.
- U.S. federal agencies, to guide construction in an array of government-owned properties.
- Facilities management.
- "Best practices" benchmarks for designers and builders, including those who are engaged in projects in jurisdictions that do not have a formal regulatory system or a governmental enforcement mechanism.
- College, university and professional school textbooks and curricula.
- Reference works related to building design and construction.

In addition to the codes themselves, the code development process brings together building professionals on a regular basis. It provides an international forum for discussion and deliberation about building design, construction methods, safety, performance requirements, technological advances and innovative products.

Development

This 2018 edition presents the code as originally issued, with changes reflected in the 2003 through 2015 editions and further changes developed through the ICC Code Development Process through 2016. A new edition of the code is promulgated every 3 years.

This code is intended to establish provisions that adequately protect public health, safety and welfare; that do not unnecessarily increase construction costs; that do not restrict the use of new materials, products or methods of construction; and that do not give preferential treatment to particular types or classes of materials, products or methods of construction.

DRAFT

INTERNATIONAL CODE COUNCIL®

Copyright © 2017 ICC. ALL RIGHTS RESERVED. Accessed by Ashley Stathatos (astathatos@annatexas.gov), (-) Order Number #100879786 on May 06, 2020 08:14 AM (PDT) pursuant to License Agreement with ICC. No further reproduction, no further reproductions by any third party, or distribution authorized. Single user only, copying and networking prohibited. ANY UNAUTHORIZED REPRODUCTION OR DISTRIBUTION IS A VIOLATION OF THE FEDERAL COPYRIGHT ACT AND THE LICENSE AGREEMENT, AND SUBJECT TO CIVIL AND CRIMINAL PENALTIES THEREUNDER.

100879786

Maintenance

The *International Property Maintenance Code* is kept up to date through the review of proposed changes submitted by code enforcement officials, industry representatives, design professionals and other interested parties. Proposed changes are carefully considered through an open code development process in which all interested and affected parties may participate.

The ICC Code Development Process reflects principles of openness, transparency, balance, due process and consensus, the principles embodied in OMB Circular A-119, which governs the federal government's use of private-sector standards. The ICC process is open to anyone; there is no cost to participate, and people can participate without travel cost through the ICC's cloud-based app, cdpAccess®. A broad cross section of interests are represented in the ICC Code Development Process. The codes, which are updated regularly, include safeguards that allow for emergency action when required for health and safety reasons.

In order to ensure that organizations with a direct and material interest in the codes have a voice in the process, the ICC has developed partnerships with key industry segments that support the ICC's important public safety mission. Some code development committee members were nominated by the following industry partners and approved by the ICC Board:

- American Institute of Architects (AIA)
- National Association of Home Builders (NAHB)

The code development committees evaluate and make recommendations regarding proposed changes to the codes. Their recommendations are then subject to public comment and council-wide votes. The ICC's governmental members—public safety officials who have no financial or business interest in the outcome—cast the final votes on proposed changes.

The contents of this work are subject to change through the code development cycles and by any governmental entity that enacts the code into law. For more information regarding the code development process, contact the Codes and Standards Development Department of the International Code Council.

While the I-Code development procedure is thorough and comprehensive, the ICC, its members and those participating in the development of the codes disclaim any liability resulting from the publication or use of the I-Codes, or from compliance or noncompliance with their provisions. The ICC does not have the power or authority to police or enforce compliance with the contents of this code.

Code Development Committee Responsibilities (Letter Designations in Front of Section Numbers)

In each code development cycle, proposed changes to this code are considered at the Committee Action Hearings by the International Property Maintenance Code Development Committee, whose action constitutes a recommendation to the voting membership for final action on the proposed changes. Proposed changes to a code section having a number beginning with a letter in brackets are considered by a different code development committee. For example, proposed changes to code sections that have the letter [F] in front of them (e.g., [F] 704.1) are considered by the International Fire Code Development Committee at the Committee Action Hearings.

The content of sections in this code that begin with a letter designation is maintained by another code development committee in accordance with the following:

[A] = Administrative Code Development Committee;

[F] = International Fire Code Development Committee;

[P] = International Plumbing Code Development Committee;

[BE] = IBC—Egress Code Development Committee; and

[BG] = IBC—General Code Development Committee.

Copyright © 2017 ICC. ALL RIGHTS RESERVED. Accessed by Ashley Stathatos (astathatos@annatexas.gov), (-) Order Number #100879786 on May 06, 2020 08:14 AM (PDT) pursuant to License Agreement with ICC. No further reproduction, no further reproductions by any third party, or distribution authorized. Single user only, copying and networking prohibited. ANY UNAUTHORIZED REPRODUCTION OR DISTRIBUTION IS A VIOLATION OF THE FEDERAL COPYRIGHT ACT AND THE LICENSE AGREEMENT, AND SUBJECT TO CIVIL AND CRIMINAL PENALTIES THEREUNDER.

DRAFT

100879786

For the development of the 2021 edition of the I-Codes, there will be two groups of code development committees and they will meet in separate years.

Group A Codes (Heard in 2018, Code Change Proposals Deadline: January 8, 2018)	**Group B Codes (Heard in 2019, Code Change Proposals Deadline: January 7, 2019)**
International Building Code – Egress (Chapters 10, 11, Appendix E) – Fire Safety (Chapters 7, 8, 9, 14, 26) – General (Chapters 2–6, 12, 27–33, Appendices A, B, C, D, K, N)	Administrative Provisions (Chapter 1 of all codes except IECC, IRC and IgCC, administrative updates to currently referenced standards, and designated definitions)
International Fire Code	**International Building Code** – Structural (Chapters 15–25, Appendices F, G, H, I, J, L, M)
International Fuel Gas Code	**International Existing Building Code**
International Mechanical Code	**International Energy Conservation Code—Commercial**
International Plumbing Code	**International Energy Conservation Code—Residential** – IECC—Residential – IRC—Energy (Chapter 11)
International Property Maintenance Code	**International Green Construction Code** (Chapter 1)
International Private Sewage Disposal Code	**International Residential Code** – IRC—Building (Chapters 1–10, Appendices E, F, H, J, K, L, M, O, Q, R, S, T)
International Residential Code – IRC—Mechanical (Chapters 12–23) – IRC—Plumbing (Chapters 25–33, Appendices G, I, N, P)	
International Swimming Pool and Spa Code	
International Wildland-Urban Interface Code	
International Zoning Code	
Note: Proposed changes to the ICC *Performance Code*™ will be heard by the code development committee noted in brackets [ ] in the text of the ICC *Performance Code*™.	

Code change proposals submitted for code sections that have a letter designation in front of them will be heard by the respective committee responsible for such code sections. Because different committees hold Committee Action Hearings in different years, proposals for the IPMC will be heard by committees in both the 2018 (Group A) and the 2019 (Group B) code development cycles.

For instance, every section of Chapter 1 of this code is designated as the responsibility of the Administrative Code Development Committee, which is part of the Group B portion of the hearings. This committee will hold its Committee Action Hearings in 2019 to consider code change proposals for Chapter 1 of all I-Codes except the *International Energy Conservation Code, International Residential Code* and *International Green Construction Code*. Therefore, any proposals received for Chapter 1 of this code will be assigned to the Administrative Code Development Committee for consideration in 2019.

It is very important that anyone submitting code change proposals understand which code development committee is responsible for the section of the code that is the subject of the code change proposal. For further information on the code development committee responsibilities, please visit the ICC website at www.iccsafe.org/scoping.

Draft

INTERNATIONAL CODE COUNCIL®

Copyright © 2017 ICC. ALL RIGHTS RESERVED. Accessed by Ashley Stathatos (astathatos@annatexas.gov), (-) Order Number #100879786 on May 06, 2020 08:14 AM (PDT) pursuant to License Agreement with ICC. No further reproduction, no further reproductions by any third party, or distribution authorized. Single user only, copying and networking prohibited. ANY UNAUTHORIZED REPRODUCTION OR DISTRIBUTION IS A VIOLATION OF THE FEDERAL COPYRIGHT ACT AND THE LICENSE AGREEMENT, AND SUBJECT TO CIVIL AND CRIMINAL PENALTIES THEREUNDER.

100879786

Marginal Markings

Solid vertical lines in the margins within the body of the code indicate a technical change from the requirements of the 2015 edition. Deletion indicators in the form of an arrow (➡) are provided in the margin where an entire section, paragraph, exception or table has been deleted or an item in a list of items or a table has been deleted.

Coordination of the International Codes

The coordination of technical provisions is one of the strengths of the ICC family of model codes. The codes can be used as a complete set of complementary documents, which will provide users with full integration and coordination of technical provisions. Individual codes can also be used in subsets or as stand-alone documents. To make sure that each individual code is as complete as possible, some technical provisions that are relevant to more than one subject area are duplicated in some of the model codes. This allows users maximum flexibility in their application of the I-Codes.

Italicized Terms

Words and terms defined in Chapter 2, Definitions, are italicized where they appear in code text and the Chapter 2 definition applies. Where such words and terms are not italicized, common-use definitions apply. The words and terms selected have code-specific definitions that the user should read carefully to facilitate better understanding of the code.

Adoption

The International Code Council maintains a copyright in all of its codes and standards. Maintaining copyright allows the ICC to fund its mission through sales of books, in both print and electronic formats. The ICC welcomes adoption of its codes by jurisdictions that recognize and acknowledge the ICC's copyright in the code, and further acknowledge the substantial shared value of the public/private partnership for code development between jurisdictions and the ICC.

The ICC also recognizes the need for jurisdictions to make laws available to the public. All I-Codes and I-Standards, along with the laws of many jurisdictions, are available for free in a nondownloadable form on the ICC's website. Jurisdictions should contact the ICC at adoptions@iccsafe.org to learn how to adopt and distribute laws based on the *International Property Maintenance Code* in a manner that provides necessary access, while maintaining the ICC's copyright.

To facilitate adoption, several sections of this code contain blanks for fill-in information that needs to be supplied by the adopting jurisdiction as part of the adoption legislation. For this code, please see:

Section 101.1. Insert: **[NAME OF JURISDICTION]**

Section 103.5. Insert: **[APPROPRIATE SCHEDULE]**

Section 112.4. Insert: **[DOLLAR AMOUNT IN TWO LOCATIONS]**

Section 302.4. Insert: **[HEIGHT IN INCHES]**

Section 304.14. Insert: **[DATES IN TWO LOCATIONS]**

Section 602.3. Insert: **[DATES IN TWO LOCATIONS]**

Section 602.4. Insert: **[DATES IN TWO LOCATIONS]**

UNOFFICIAL

Copyright © 2017 ICC. ALL RIGHTS RESERVED. Accessed by Ashley Stathatos (astathatos@annatexas.gov), (-) Order Number #100879786 on May 06, 2020 08:14 AM (PDT) pursuant to License Agreement with ICC. No further reproduction, no further reproductions by any third party, or distribution authorized. Single user only, copying and networking prohibited. ANY UNAUTHORIZED REPRODUCTION OR DISTRIBUTION IS A VIOLATION OF THE FEDERAL COPYRIGHT ACT AND THE LICENSE AGREEMENT, AND SUBJECT TO CIVIL AND CRIMINAL PENALTIES THEREUNDER.

EFFECTIVE USE OF THE INTERNATIONAL PROPERTY MAINTENANCE CODE

The *International Property Maintenance Code* (IPMC) is a model code that regulates the minimum maintenance requirements for existing buildings.

The IPMC is a maintenance document intended to establish minimum maintenance standards for basic equipment, light, ventilation, heating, sanitation and fire safety. Responsibility is fixed among owners, operators and occupants for code compliance. The IPMC provides for the regulation and safe use of existing structures in the interest of the social and economic welfare of the community.

Arrangement and Format of the 2018 IPMC

Before applying the requirements of the IPMC it is beneficial to understand its arrangement and format. The IPMC, like other codes published by ICC, is arranged and organized to follow sequential steps that generally occur during an inspection. The IPMC is divided into eight different parts:

Chapters	Subjects
1	Scope and Administration
2	Definitions
3	General Requirements
4	Light, Ventilation and Occupancy Limitations
5	Plumbing Facilities and Fixture Requirements
6	Mechanical and Electrical Requirements
7	Fire Safety Requirements
8	Referenced Standards

The following is a chapter-by-chapter synopsis of the scope and intent of the provisions of the *International Property Maintenance Code:*

Chapter 1 Scope and Administration. This chapter contains provisions for the application, enforcement and administration of subsequent requirements of the code. In addition to establishing the scope of the code, Chapter 1 identifies which buildings and structures come under its purview. Chapter 1 is largely concerned with maintaining "due process of law" in enforcing the property maintenance criteria contained in the body of the code. Only through careful observation of the administrative provisions can the building official reasonably expect to demonstrate that "equal protection under the law" has been provided.

Chapter 2 Definitions. All terms that are defined in the code are listed alphabetically in Chapter 2. While a defined term may be used in one chapter or another, the meaning provided in Chapter 2 is applicable throughout the code.

Where understanding of a term's definition is especially key to or necessary for understanding of a particular code provision, the term is shown in italics. This is true only for those terms that have a meaning that is unique to the code. In other words, the generally understood meaning of a term or phrase might not be sufficient or consistent with the meaning prescribed by the code; therefore, it is essential that the code-defined meaning be known.

Guidance is provided regarding tense, gender and plurality of defined terms as well as terms not defined in this code.

DRAFT

INTERNATIONAL CODE COUNCIL®

Copyright © 2017 ICC. ALL RIGHTS RESERVED. Accessed by Ashley Stathatos (astathatos@annatexas.gov), (-) Order Number #100879786 on May 06, 2020 08:14 AM (PDT) pursuant to License Agreement with ICC. No further reproduction, no further reproductions by any third party, or distribution authorized. Single user only, copying and networking prohibited. ANY UNAUTHORIZED REPRODUCTION OR DISTRIBUTION IS A VIOLATION OF THE FEDERAL COPYRIGHT ACT AND THE LICENSE AGREEMENT, AND SUBJECT TO CIVIL AND CRIMINAL PENALTIES THEREUNDER.

100879786

Chapter 3 General Requirements. Chapter 3, "General Requirements," is broad in scope. It includes a variety of requirements for the exterior property areas as well as the interior and exterior elements of the structure. This chapter provides requirements that are intended to maintain a minimum level of safety and sanitation for both the general public and the occupants of a structure, and to maintain a building's structural and weather-resistance performance. Chapter 3 provides specific criteria for regulating the installation and maintenance of specific building components; maintenance requirements for vacant structures and land; requirements regulating the safety, sanitation and appearance of the interior and exterior of structures and all exterior property areas; accessory structures; vehicle storage regulations and establishes who is responsible for complying with the chapter's provisions. This chapter also contains the requirements for swimming pools, spas and hot tubs and the requirements for protective barriers and gates in these barriers. Chapter 3 establishes the responsible parties for exterminating insects and rodents, and maintaining sanitary conditions in all types of occupancies.

Chapter 4 Light, Ventilation and Occupancy Limitations. The purposes of Chapter 4 are to set forth these requirements in the code and to establish the minimum environment for occupiable and habitable buildings, by establishing the minimum criteria for light and ventilation and identifying occupancy limitations including minimum room width and area, minimum ceiling height and restrictions to prevent overcrowding. This chapter also provides for alternative arrangements of windows and other devices to comply with the requirements for light and ventilation and prohibits certain room arrangements and occupancy uses.

Chapter 5 Plumbing Facilities and Fixture Requirements. Chapter 5 establishes the minimum criteria for the installation, maintenance and location of plumbing systems and facilities, including the water supply system, water heating appliances, sewage disposal system and related plumbing fixtures.

Sanitary and clean conditions in occupied buildings are dependent upon certain basic plumbing principles, including providing potable water to a building, providing the basic fixtures to effectively utilize that water and properly removing waste from the building. Chapter 5 establishes the minimum criteria to verify that these principles are maintained throughout the life of a building.

Chapter 6 Mechanical and Electrical Requirements. The purpose of Chapter 6 is to establish minimum performance requirements for heating, electrical and mechanical facilities and to establish minimum standards for the safety of these facilities.

This chapter establishes minimum criteria for the installation and maintenance of the following: heating and air-conditioning equipment, appliances and their supporting systems; water heating equipment, appliances and systems; cooking equipment and appliances; ventilation and exhaust equipment; gas and liquid fuel distribution piping and components; fireplaces and solid fuel-burning appliances; chimneys and vents; electrical services; lighting fixtures; electrical receptacle outlets; electrical distribution system equipment, devices and wiring; and elevators, escalators and dumbwaiters.

Chapter 7 Fire Safety Requirements. The purpose of Chapter 7 is to address those fire hazards that arise as the result of a building's occupancy. It also provides minimum requirements for fire safety issues that are most likely to arise in older buildings.

This chapter contains requirements for means of egress in existing buildings, including path of travel, required egress width, means of egress doors and emergency escape openings.

Chapter 7 establishes the minimum requirements for fire safety facilities and fire protection systems, as these are essential fire safety systems.

DRAFT

Copyright © 2017 ICC. ALL RIGHTS RESERVED. Accessed by Ashley Stathatos (astathatos@annatexas.gov), (-) Order Number #100879786 on May 06, 2020 08:14 AM (PDT) pursuant to License Agreement with ICC. No further reproduction, no further reproductions by any third party, or distribution authorized. Single user only, copying and networking prohibited. ANY UNAUTHORIZED REPRODUCTION OR DISTRIBUTION IS A VIOLATION OF THE FEDERAL COPYRIGHT ACT AND THE LICENSE AGREEMENT, AND SUBJECT TO CIVIL AND CRIMINAL PENALTIES THEREUNDER.

100879786

Chapter 8 Referenced Standards. The code contains numerous references to standards that are used to regulate materials and methods of construction. Chapter 8 contains a comprehensive list of all standards that are referenced in the code. The standards are part of the code to the extent of the reference to the standard. Compliance with the referenced standard is necessary for compliance with this code. By providing specifically adopted standards, the construction and installation requirements necessary for compliance with the code can be readily determined. The basis for code compliance is, therefore, established and available on an equal basis to the code official, contractor, designer and owner.

Chapter 8 is organized in a manner that makes it easy to locate specific standards. It lists all of the referenced standards, alphabetically, by acronym of the promulgating agency of the standard. Each agency's standards are then listed in either alphabetical or numeric order based upon the standard identification. The list also contains the title of the standard; the edition (date) of the standard referenced; any addenda included as part of the ICC adoption; and the section or sections of this code that reference the standard.

DUPLICATE

INTERNATIONAL CODE COUNCIL®

Copyright © 2017 ICC. ALL RIGHTS RESERVED. Accessed by Ashley Stathatos (astathatos@annatexas.gov), (-) Order Number #100879786 on May 06, 2020 08:14 AM (PDT) pursuant to License Agreement with ICC. No further reproduction, no further reproductions by any third party, or distribution authorized. Single user only, copying and networking prohibited. ANY UNAUTHORIZED REPRODUCTION OR DISTRIBUTION IS A VIOLATION OF THE FEDERAL COPYRIGHT ACT AND THE LICENSE AGREEMENT, AND SUBJECT TO CIVIL AND CRIMINAL PENALTIES THEREUNDER.

DUPLICATE

Copyright © 2017 ICC. ALL RIGHTS RESERVED. Accessed by Ashley Stathatos (astathatos@annatexas.gov), (-) Order Number #100879786 on May 06, 2020 08:14 AM (PDT) pursuant to License Agreement with ICC. No further reproduction, no further reproductions by any third party, or distribution authorized. Single user only, copying and networking prohibited. ANY UNAUTHORIZED REPRODUCTION OR DISTRIBUTION IS A VIOLATION OF THE FEDERAL COPYRIGHT ACT AND THE LICENSE AGREEMENT, AND SUBJECT TO CIVIL AND CRIMINAL PENALTIES THEREUNDER.

100879786

TABLE OF CONTENTS

CHAPTER 1 SCOPE AND ADMINISTRATION 1

PART 1—SCOPE AND APPLICATION. 1

Section
101 General 1
102 Applicability 1

PART 2—ADMINISTRATION AND ENFORCEMENT 2

Section
103 Department of Property Maintenance Inspection 2
104 Duties and Powers of the Code Official 2
105 Approval 3
106 Violations 3
107 Notices and Orders 3
108 Unsafe Structures and Equipment 4
109 Emergency Measures 5
110 Demolition 6
111 Means of Appeal 6
112 Stop Work Order 7

CHAPTER 2 DEFINITIONS 9

Section
201 General 9
202 General Definitions 9

CHAPTER 3 GENERAL REQUIREMENTS. 11

Section
301 General 11
302 Exterior Property Areas 11
303 Swimming Pools, Spas and Hot Tubs 12
304 Exterior Structure 12
305 Interior Structure 14
306 Component Serviceability 14
307 Handrails and Guardrails 15
308 Rubbish and Garbage 15
309 Pest Elimination 15

CHAPTER 4 LIGHT, VENTILATION AND OCCUPANCY LIMITATIONS 17

Section
401 General 17
402 Light. 17
403 Ventilation 17
404 Occupancy Limitations 18

CHAPTER 5 PLUMBING FACILITIES AND FIXTURE REQUIREMENTS 21

Section
501 General. 21
502 Required Facilities 21
503 Toilet Rooms 21
504 Plumbing Systems and Fixtures. 21
505 Water System. 22
506 Sanitary Drainage System 22
507 Storm Drainage 22

CHAPTER 6 MECHANICAL AND ELECTRICAL REQUIREMENTS 23

Section
601 General. 23
602 Heating Facilities 23
603 Mechanical Equipment 23
604 Electrical Facilities. 24
605 Electrical Equipment 24
606 Elevators, Escalators and Dumbwaiters. 25
607 Duct Systems 25

CHAPTER 7 FIRE SAFETY REQUIREMENTS . . . 27

Section
701 General. 27
702 Means of Egress. 27
703 Fire-resistance Ratings. 27
704 Fire Protection Systems 28
705 Carbon Monoxide Alarms and Detection 31

CHAPTER 8 REFERENCED STANDARDS. 33

APPENDIX A BOARDING STANDARD. 35

Section
A101 General 35
A102 Materials 35
A103 Installation. 35
A104 Referenced Standard. 35

INDEX. 37

DRAFT

INTERNATIONAL CODE COUNCIL®

Copyright © 2017 ICC. ALL RIGHTS RESERVED. Accessed by Ashley Stathatos (astathatos@annatexas.gov), (-) Order Number #100879786 on May 06, 2020 08:14 AM (PDT) pursuant to License Agreement with ICC. No further reproduction, no further reproductions by any third party, or distribution authorized. Single user only, copying and networking prohibited. ANY UNAUTHORIZED REPRODUCTION OR DISTRIBUTION IS A VIOLATION OF THE FEDERAL COPYRIGHT ACT AND THE LICENSE AGREEMENT, AND SUBJECT TO CIVIL AND CRIMINAL PENALTIES THEREUNDER.

100879786

DUPLICATE

Copyright © 2017 ICC. ALL RIGHTS RESERVED. Accessed by Ashley Stathatos (astathatos@annatexas.gov), (-) Order Number #100879786 on May 06, 2020 08:14 AM (PDT) pursuant to License Agreement with ICC. No further reproduction, no further reproductions by any third party, or distribution authorized. Single user only, copying and networking prohibited. ANY UNAUTHORIZED REPRODUCTION OR DISTRIBUTION IS A VIOLATION OF THE FEDERAL COPYRIGHT ACT AND THE LICENSE AGREEMENT, AND SUBJECT TO CIVIL AND CRIMINAL PENALTIES THEREUNDER.

CHAPTER 1

SCOPE AND ADMINISTRATION

User note:

About this chapter: *Chapter 1 establishes the limits of applicability of the code and describes how the code is to be applied and enforced. Chapter 1 is in two parts: Part 1—Scope and Application (Sections 101 and 102) and Part 2—Administration and Enforcement (Sections 103 – 112). Section 101 identifies which buildings and structures come under its purview and references other I-Codes as applicable.*

This code is intended to be adopted as a legally enforceable document and it cannot be effective without adequate provisions for its administration and enforcement. The provisions of Chapter 1 establish the authority and duties of the code official appointed by the authority having jurisdiction and also establish the rights and privileges of the property owner and building occupants.

PART 1 — SCOPE AND APPLICATION

SECTION 101
GENERAL

[A] 101.1 Title. These regulations shall be known as the *International Property Maintenance Code* of **[NAME OF JURISDICTION]**, hereinafter referred to as "this code."

[A] 101.2 Scope. The provisions of this code shall apply to all existing residential and nonresidential structures and all existing *premises* and constitute minimum requirements and standards for *premises*, structures, equipment and facilities for light, *ventilation*, space, heating, sanitation, protection from the elements, a reasonable level of safety from fire and other hazards, and for a reasonable level of sanitary maintenance; the responsibility of *owners*, an owner's authorized agent, *operators* and *occupants*; the *occupancy* of existing structures and *premises*, and for administration, enforcement and penalties.

[A] 101.3 Intent. This code shall be construed to secure its expressed intent, which is to ensure public health, safety and welfare insofar as they are affected by the continued *occupancy* and maintenance of structures and *premises*. Existing structures and *premises* that do not comply with these provisions shall be altered or repaired to provide a minimum level of health and safety as required herein.

[A] 101.4 Severability. If a section, subsection, sentence, clause or phrase of this code is, for any reason, held to be unconstitutional, such decision shall not affect the validity of the remaining portions of this code.

SECTION 102
APPLICABILITY

[A] 102.1 General. Where there is a conflict between a general requirement and a specific requirement, the specific requirement shall govern. Where differences occur between provisions of this code and the referenced standards, the provisions of this code shall apply. Where, in a specific case, different sections of this code specify different requirements, the most restrictive shall govern.

102.2 Maintenance. Equipment, systems, devices and safeguards required by this code or a previous regulation or code under which the structure or *premises* was constructed, altered or repaired shall be maintained in good working order. An *owner*, owner's authorized agent, *operator* or *occupant* shall not cause any service, facility, equipment or utility that is required under this section to be removed from, shut off from or discontinued for any occupied dwelling, except for such temporary interruption as necessary while repairs or alterations are in progress. The requirements of this code are not intended to provide the basis for removal or abrogation of fire protection and safety systems and devices in existing structures. Except as otherwise specified herein, the *owner* or the *owner's* authorized agent shall be responsible for the maintenance of buildings, structures and *premises*.

[A] 102.3 Application of other codes. Repairs, additions or alterations to a structure, or changes of *occupancy*, shall be done in accordance with the procedures and provisions of the *International Building Code, International Existing Building Code, International Energy Conservation Code, International Fire Code, International Fuel Gas Code, International Mechanical Code, International Residential Code, International Plumbing Code* and NFPA 70. Nothing in this code shall be construed to cancel, modify or set aside any provision of the *International Zoning Code*.

[A] 102.4 Existing remedies. The provisions in this code shall not be construed to abolish or impair existing remedies of the jurisdiction or its officers or agencies relating to the removal or demolition of any structure that is dangerous, unsafe and insanitary.

[A] 102.5 Workmanship. Repairs, maintenance work, alterations or installations that are caused directly or indirectly by the enforcement of this code shall be executed and installed in a *workmanlike* manner and installed in accordance with the manufacturer's instructions.

[A] 102.6 Historic buildings. The provisions of this code shall not be mandatory for existing buildings or structures designated as historic buildings where such buildings or structures are judged by the *code official* to be safe and in the public interest of health, safety and welfare.

[A] 102.7 Referenced codes and standards. The codes and standards referenced in this code shall be those that are listed in Chapter 8 and considered part of the requirements of this

INTERNATIONAL CODE COUNCIL®
Copyright © 2017 ICC. ALL RIGHTS RESERVED. Accessed by Ashley Stathatos (astathatos@annatexas.gov), (-) Order Number #100879786 on May 06, 2020 08:14 AM (PDT) pursuant to License Agreement with ICC. No further reproduction, no further reproductions by any third party, or distribution authorized. Single user only, copying and networking prohibited. ANY UNAUTHORIZED REPRODUCTION OR DISTRIBUTION IS A VIOLATION OF THE FEDERAL COPYRIGHT ACT AND THE LICENSE AGREEMENT, AND SUBJECT TO CIVIL AND CRIMINAL PENALTIES THEREUNDER.

100879786

code to the prescribed extent of each such reference and as further regulated in Sections 102.7.1 and 102.7.2.

Exception: Where enforcement of a code provision would violate the conditions of the listing of the equipment or appliance, the conditions of the listing shall apply.

[A] 102.7.1 Conflicts. Where conflicts occur between provisions of this code and the referenced standards, the provisions of this code shall apply.

[A] 102.7.2 Provisions in referenced codes and standards. Where the extent of the reference to a referenced code or standard includes subject matter that is within the scope of this code, the provisions of this code, as applicable, shall take precedence over the provisions in the referenced code or standard.

[A] 102.8 Requirements not covered by code. Requirements necessary for the strength, stability or proper operation of an existing fixture, structure or equipment, or for the public safety, health and general welfare, not specifically covered by this code, shall be determined by the *code official*.

[A] 102.9 Application of references. References to chapter or section numbers, or to provisions not specifically identified by number, shall be construed to refer to such chapter, section or provision of this code.

[A] 102.10 Other laws. The provisions of this code shall not be deemed to nullify any provisions of local, state or federal law.

PART 2 — ADMINISTRATION AND ENFORCEMENT

SECTION 103
DEPARTMENT OF PROPERTY MAINTENANCE INSPECTION

[A] 103.1 General. The department of property maintenance inspection is hereby created and the executive official in charge thereof shall be known as the *code official*.

[A] 103.2 Appointment. The *code official* shall be appointed by the chief appointing authority of the jurisdiction.

[A] 103.3 Deputies. In accordance with the prescribed procedures of this jurisdiction and with the concurrence of the appointing authority, the *code official* shall have the authority to appoint a deputy(s). Such employees shall have powers as delegated by the *code official*.

[A] 103.4 Liability. The *code official*, member of the board of appeals or employee charged with the enforcement of this code, while acting for the jurisdiction, in good faith and without malice in the discharge of the duties required by this code or other pertinent law or ordinance, shall not thereby be rendered civilly or criminally liable personally, and is hereby relieved from all personal liability for any damage accruing to persons or property as a result of an act or by reason of an act or omission in the discharge of official duties.

[A] 103.4.1 Legal defense. Any suit or criminal complaint instituted against any officer or employee because of an act performed by that officer or employee in the lawful discharge of duties and under the provisions of this code shall be defended by the legal representative of the jurisdiction until the final termination of the proceedings. The code official or any subordinate shall not be liable for costs in an action, suit or proceeding that is instituted in pursuance of the provisions of this code.

[A] 103.5 Fees. The fees for activities and services performed by the department in carrying out its responsibilities under this code shall be as indicated in the following schedule.

[JURISDICTION TO INSERT APPROPRIATE SCHEDULE.]

SECTION 104
DUTIES AND POWERS OF THE CODE OFFICIAL

[A] 104.1 General. The *code official* is hereby authorized and directed to enforce the provisions of this code. The *code official* shall have the authority to render interpretations of this code and to adopt policies and procedures in order to clarify the application of its provisions. Such interpretations, policies and procedures shall be in compliance with the intent and purpose of this code. Such policies and procedures shall not have the effect of waiving requirements specifically provided for in this code.

[A] 104.2 Inspections. The *code official* shall make all of the required inspections, or shall accept reports of inspection by *approved* agencies or individuals. Reports of such inspections shall be in writing and be certified by a responsible officer of such *approved* agency or by the responsible individual. The *code official* is authorized to engage such expert opinion as deemed necessary to report on unusual technical issues that arise, subject to the approval of the appointing authority.

[A] 104.3 Right of entry. Where it is necessary to make an inspection to enforce the provisions of this code, or whenever the *code official* has reasonable cause to believe that there exists in a *structure* or upon a *premises* a condition in violation of this code, the *code official* is authorized to enter the structure or *premises* at reasonable times to inspect or perform the duties imposed by this code, provided that if such *structure* or *premises* is occupied the *code official* shall present credentials to the *occupant* and request entry. If such structure or *premises* is unoccupied, the *code official* shall first make a reasonable effort to locate the *owner*, owner's authorized agent or other person having charge or control of the *structure* or *premises* and request entry. If entry is refused, the *code official* shall have recourse to the remedies provided by law to secure entry.

[A] 104.4 Identification. The *code official* shall carry proper identification when inspecting *structures* or *premises* in the performance of duties under this code.

[A] 104.5 Notices and orders. The *code official* shall issue all necessary notices or orders to ensure compliance with this code.

[A] 104.6 Department records. The *code official* shall keep official records of all business and activities of the department specified in the provisions of this code. Such records shall be retained in the official records for the period required for retention of public records.

INTERNATIONAL CODE COUNCIL®

Copyright © 2017 ICC. ALL RIGHTS RESERVED. Accessed by Ashley Stathatos (astathatos@annatexas.gov), (-) Order Number #100879786 on May 06, 2020 08:14 AM (PDT) pursuant to License Agreement with ICC. No further reproduction, no further reproductions by any third party, or distribution authorized. Single user only, copying and networking prohibited. ANY UNAUTHORIZED REPRODUCTION OR DISTRIBUTION IS A VIOLATION OF THE FEDERAL COPYRIGHT ACT AND THE LICENSE AGREEMENT, AND SUBJECT TO CIVIL AND CRIMINAL PENALTIES THEREUNDER.

100879786

SECTION 105
APPROVAL

[A] 105.1 Modifications. Whenever there are practical difficulties involved in carrying out the provisions of this code, the *code official* shall have the authority to grant modifications for individual cases upon application of the *owner* or *owner's* authorized agent, provided that the *code official* shall first find that special individual reason makes the strict letter of this code impractical, the modification is in compliance with the intent and purpose of this code and that such modification does not lessen health, life and fire safety requirements. The details of action granting modifications shall be recorded and entered in the department files.

[A] 105.2 Alternative materials, design and methods of construction and equipment. The provisions of this code are not intended to prevent the installation of any material or to prohibit any design or method of construction not specifically prescribed by this code, provided that any such alternative has been *approved*. An alternative material, design or method of construction shall be *approved* where the *code official* finds that the proposed design is satisfactory and complies with the intent of the provisions of this code, and that the material, method or work offered is, for the purpose intended, not less than the equivalent of that prescribed in this code in quality, strength, effectiveness, fire resistance, durability and safety. Where the alternative material, design or method of construction is not *approved*, the *code official* shall respond in writing, stating the reasons why the alternative was not *approved*.

[A] 105.3 Required testing. Whenever there is insufficient evidence of compliance with the provisions of this code or evidence that a material or method does not conform to the requirements of this code, or in order to substantiate claims for alternative materials or methods, the *code official* shall have the authority to require tests to be made as evidence of compliance without expense to the jurisdiction.

[A] 105.3.1 Test methods. Test methods shall be as specified in this code or by other recognized test standards. In the absence of recognized and accepted test methods, the *code official* shall be permitted to approve appropriate testing procedures performed by an *approved* agency.

[A] 105.3.2 Test reports. Reports of tests shall be retained by the *code official* for the period required for retention of public records.

[A] 105.4 Used material and equipment. Materials that are reused shall comply with the requirements of this code for new materials. Materials, equipment and devices shall not be reused unless such elements are in good repair or have been reconditioned and tested where necessary, placed in good and proper working condition and *approved* by the *code official*.

[A] 105.5 Approved materials and equipment. Materials, equipment and devices *approved* by the *code official* shall be constructed and installed in accordance with such approval.

[A] 105.6 Research reports. Supporting data, where necessary to assist in the approval of materials or assemblies not specifically provided for in this code, shall consist of valid research reports from *approved* sources.

SECTION 106
VIOLATIONS

[A] 106.1 Unlawful acts. It shall be unlawful for a person, firm or corporation to be in conflict with or in violation of any of the provisions of this code.

[A] 106.2 Notice of violation. The *code official* shall serve a notice of violation or order in accordance with Section 107.

[A] 106.3 Prosecution of violation. Any person failing to comply with a notice of violation or order served in accordance with Section 107 shall be deemed guilty of a misdemeanor or civil infraction as determined by the local municipality, and the violation shall be deemed a *strict liability offense*. If the notice of violation is not complied with, the *code official* shall institute the appropriate proceeding at law or in equity to restrain, correct or abate such violation, or to require the removal or termination of the unlawful *occupancy* of the structure in violation of the provisions of this code or of the order or direction made pursuant thereto. Any action taken by the authority having jurisdiction on such *premises* shall be charged against the real estate upon which the structure is located and shall be a lien upon such real estate.

[A] 106.4 Violation penalties. Any person who shall violate a provision of this code, or fail to comply therewith, or with any of the requirements thereof, shall be prosecuted within the limits provided by state or local laws. Each day that a violation continues after due notice has been served shall be deemed a separate offense.

[A] 106.5 Abatement of violation. The imposition of the penalties herein prescribed shall not preclude the legal officer of the jurisdiction from instituting appropriate action to restrain, correct or abate a violation, or to prevent illegal *occupancy* of a building, structure or *premises*, or to stop an illegal act, conduct, business or utilization of the building, structure or *premises*.

SECTION 107
NOTICES AND ORDERS

107.1 Notice to person responsible. Whenever the *code official* determines that there has been a violation of this code or has grounds to believe that a violation has occurred, notice shall be given in the manner prescribed in Sections 107.2 and 107.3 to the person responsible for the violation as specified in this code. Notices for condemnation procedures shall comply with Section 108.3.

107.2 Form. Such notice prescribed in Section 107.1 shall be in accordance with all of the following:

1. Be in writing.
2. Include a description of the real estate sufficient for identification.
3. Include a statement of the violation or violations and why the notice is being issued.
4. Include a correction order allowing a reasonable time to make the repairs and improvements required to bring the *dwelling unit* or structure into compliance with the provisions of this code.

CITY COPY

INTERNATIONAL CODE COUNCIL®
Copyright © 2017 ICC. ALL RIGHTS RESERVED. Accessed by Ashley Stathatos (astathatos@annatexas.gov), (-) Order Number #100879786 on May 06, 2020 08:14 AM (PDT) pursuant to License Agreement with ICC. No further reproduction, no further reproductions by any third party, or distribution authorized. Single user only, copying and networking prohibited. ANY UNAUTHORIZED REPRODUCTION OR DISTRIBUTION IS A VIOLATION OF THE FEDERAL COPYRIGHT ACT AND THE LICENSE AGREEMENT, AND SUBJECT TO CIVIL AND CRIMINAL PENALTIES THEREUNDER.

100879786

5. Inform the property *owner* or owner's authorized agent of the right to appeal.
6. Include a statement of the right to file a lien in accordance with Section 106.3.

107.3 Method of service. Such notice shall be deemed to be properly served if a copy thereof is: delivered personally, or sent by certified or first-class mail addressed to the last known address. If the notice is returned showing that the letter was not delivered, a copy thereof shall be posted in a conspicuous place in or about the structure affected by such notice.

107.4 Unauthorized tampering. Signs, tags or seals posted or affixed by the *code official* shall not be mutilated, destroyed or tampered with, or removed without authorization from the *code official*.

107.5 Penalties. Penalties for noncompliance with orders and notices shall be as set forth in Section 106.4.

107.6 Transfer of ownership. It shall be unlawful for the *owner* of any *dwelling unit* or structure who has received a compliance order or upon whom a notice of violation has been served to sell, transfer, mortgage, lease or otherwise dispose of such *dwelling unit* or structure to another until the provisions of the compliance order or notice of violation have been complied with, or until such *owner* or the owner's authorized agent shall first furnish the grantee, transferee, mortgagee or lessee a true copy of any compliance order or notice of violation issued by the *code official* and shall furnish to the *code official* a signed and notarized statement from the grantee, transferee, mortgagee or lessee, acknowledging the receipt of such compliance order or notice of violation and fully accepting the responsibility without condition for making the corrections or repairs required by such compliance order or notice of violation.

SECTION 108
UNSAFE STRUCTURES AND EQUIPMENT

108.1 General. When a structure or equipment is found by the *code official* to be unsafe, or when a structure is found unfit for human *occupancy*, or is found unlawful, such structure shall be *condemned* pursuant to the provisions of this code.

108.1.1 Unsafe structures. An unsafe structure is one that is found to be dangerous to the life, health, property or safety of the public or the *occupants* of the structure by not providing minimum safeguards to protect or warn *occupants* in the event of fire, or because such structure contains unsafe equipment or is so damaged, decayed, dilapidated, structurally unsafe or of such faulty construction or unstable foundation, that partial or complete collapse is possible.

108.1.2 Unsafe equipment. Unsafe equipment includes any boiler, heating equipment, elevator, moving stairway, electrical wiring or device, flammable liquid containers or other equipment on the *premises* or within the structure that is in such disrepair or condition that such equipment is a hazard to life, health, property or safety of the public or *occupants* of the *premises* or structure.

108.1.3 Structure unfit for human occupancy. A structure is unfit for human *occupancy* whenever the *code official* finds that such structure is unsafe, unlawful or, because of the degree to which the structure is in disrepair or lacks maintenance, is insanitary, vermin or rat infested, contains filth and contamination, or lacks *ventilation*, illumination, sanitary or heating facilities or other essential equipment required by this code, or because the location of the structure constitutes a hazard to the *occupants* of the structure or to the public.

108.1.4 Unlawful structure. An unlawful structure is one found in whole or in part to be occupied by more persons than permitted under this code, or was erected, altered or occupied contrary to law.

108.1.5 Dangerous structure or premises. For the purpose of this code, any structure or *premises* that has any or all of the conditions or defects described as follows shall be considered to be dangerous:

1. Any door, aisle, passageway, stairway, exit or other means of egress that does not conform to the *approved* building or fire code of the jurisdiction as related to the requirements for existing buildings.
2. The walking surface of any aisle, passageway, stairway, exit or other means of egress is so warped, worn loose, torn or otherwise unsafe as to not provide safe and adequate means of egress.
3. Any portion of a building, structure or appurtenance that has been damaged by fire, earthquake, wind, flood, *deterioration*, *neglect*, abandonment, vandalism or by any other cause to such an extent that it is likely to partially or completely collapse, or to become *detached* or dislodged.
4. Any portion of a building, or any member, appurtenance or ornamentation on the exterior thereof that is not of sufficient strength or stability, or is not so *anchored*, attached or fastened in place so as to be capable of resisting natural or artificial loads of one and one-half the original designed value.
5. The building or structure, or part of the building or structure, because of dilapidation, *deterioration*, decay, faulty construction, the removal or movement of some portion of the ground necessary for the support, or for any other reason, is likely to partially or completely collapse, or some portion of the foundation or underpinning of the building or structure is likely to fail or give way.
6. The building or structure, or any portion thereof, is clearly unsafe for its use and *occupancy*.
7. The building or structure is *neglected*, damaged, dilapidated, unsecured or abandoned so as to become an attractive nuisance to children who might play in the building or structure to their danger, becomes a harbor for vagrants, criminals or immoral persons, or enables persons to resort to the building or structure for committing a nuisance or an unlawful act.

INTERNATIONAL CODE COUNCIL®

Copyright © 2017 ICC. ALL RIGHTS RESERVED. Accessed by Ashley Stathatos (astathatos@annatexas.gov), (-) Order Number #100879786 on May 06, 2020 08:14 AM (PDT) pursuant to License Agreement with ICC. No further reproduction, no further reproductions by any third party, or distribution authorized. Single user only, copying and networking prohibited. ANY UNAUTHORIZED REPRODUCTION OR DISTRIBUTION IS A VIOLATION OF THE FEDERAL COPYRIGHT ACT AND THE LICENSE AGREEMENT, AND SUBJECT TO CIVIL AND CRIMINAL PENALTIES THEREUNDER.

100879786

8. Any building or structure has been constructed, exists or is maintained in violation of any specific requirement or prohibition applicable to such building or structure provided by the *approved* building or fire code of the jurisdiction, or of any law or ordinance to such an extent as to present either a substantial risk of fire, building collapse or any other threat to life and safety.

9. A building or structure, used or intended to be used for dwelling purposes, because of inadequate maintenance, dilapidation, decay, damage, faulty construction or arrangement, inadequate light, *ventilation*, mechanical or plumbing system, or otherwise, is determined by the *code official* to be unsanitary, unfit for human habitation or in such a condition that is likely to cause sickness or disease.

10. Any building or structure, because of a lack of sufficient or proper fire-resistance-rated construction, fire protection systems, electrical system, fuel connections, mechanical system, plumbing system or other cause, is determined by the *code official* to be a threat to life or health.

11. Any portion of a building remains on a site after the demolition or destruction of the building or structure or whenever any building or structure is abandoned so as to constitute such building or portion thereof as an attractive nuisance or hazard to the public.

108.2 Closing of vacant structures. If the structure is vacant and unfit for human habitation and *occupancy*, and is not in danger of structural collapse, the *code official* is authorized to post a placard of condemnation on the *premises* and order the structure closed up so as not to be an attractive nuisance. Upon failure of the *owner* or owner's authorized agent to close up the *premises* within the time specified in the order, the *code official* shall cause the *premises* to be closed and secured through any available public agency or by contract or arrangement by private persons and the cost thereof shall be charged against the real estate upon which the structure is located and shall be a lien upon such real estate and shall be collected by any other legal resource.

108.2.1 Authority to disconnect service utilities. The *code official* shall have the authority to authorize disconnection of utility service to the building, structure or system regulated by this code and the referenced codes and standards set forth in Section 102.7 in case of emergency where necessary to eliminate an immediate hazard to life or property or where such utility connection has been made without approval. The *code official* shall notify the serving utility and, whenever possible, the *owner* or owner's authorized agent and *occupant* of the building, structure or service system of the decision to disconnect prior to taking such action. If not notified prior to disconnection the *owner*, owner's authorized agent or *occupant* of the building structure or service system shall be notified in writing as soon as practical thereafter.

108.3 Notice. Whenever the *code official* has condemned a structure or equipment under the provisions of this section, notice shall be posted in a conspicuous place in or about the structure affected by such notice and served on the *owner*, owner's authorized agent or the person or persons responsible for the structure or equipment in accordance with Section 107.3. If the notice pertains to equipment, it shall be placed on the condemned equipment. The notice shall be in the form prescribed in Section 107.2.

108.4 Placarding. Upon failure of the *owner,* owner's authorized agent or person responsible to comply with the notice provisions within the time given, the *code official* shall post on the *premises* or on defective equipment a placard bearing the word "Condemned" and a statement of the penalties provided for occupying the *premises*, operating the equipment or removing the placard.

108.4.1 Placard removal. The *code official* shall remove the condemnation placard whenever the defect or defects upon which the condemnation and placarding action were based have been eliminated. Any person who defaces or removes a condemnation placard without the approval of the *code official* shall be subject to the penalties provided by this code.

108.5 Prohibited occupancy. Any occupied structure condemned and placarded by the *code official* shall be vacated as ordered by the *code official*. Any person who shall occupy a placarded *premises* or shall operate placarded equipment, and any *owner,* owner's authorized agent or person responsible for the *premises* who shall let anyone occupy a placarded *premises* or operate placarded equipment shall be liable for the penalties provided by this code.

108.6 Abatement methods. The *owner*, owner's authorized agent, *operator* or *occupant* of a building, *premises* or equipment deemed unsafe by the *code official* shall abate or cause to be abated or corrected such unsafe conditions either by repair, rehabilitation, demolition or other *approved* corrective action.

108.7 Record. The *code official* shall cause a report to be filed on an unsafe condition. The report shall state the *occupancy* of the structure and the nature of the unsafe condition.

SECTION 109
EMERGENCY MEASURES

109.1 Imminent danger. When, in the opinion of the *code official*, there is *imminent danger* of failure or collapse of a building or structure that endangers life, or when any structure or part of a structure has fallen and life is endangered by the occupation of the structure, or when there is actual or potential danger to the building *occupants* or those in the proximity of any structure because of explosives, explosive fumes or vapors or the presence of toxic fumes, gases or materials, or operation of defective or dangerous equipment, the *code official* is hereby authorized and empowered to order and require the *occupants* to vacate the *premises* forthwith. The *code official* shall cause to be posted at each entrance to such structure a notice reading as follows: "This *Structure* Is Unsafe and Its *Occupancy* Has Been Prohibited by the *Code*

INTERNATIONAL CODE COUNCIL®
Copyright © 2017 ICC. ALL RIGHTS RESERVED. Accessed by Ashley Stathatos (astathatos@annatexas.gov), (-) Order Number #100879786 on May 06, 2020 08:14 AM (PDT) pursuant to License Agreement with ICC. No further reproduction, no further reproductions by any third party, or distribution authorized. Single user only, copying and networking prohibited. ANY UNAUTHORIZED REPRODUCTION OR DISTRIBUTION IS A VIOLATION OF THE FEDERAL COPYRIGHT ACT AND THE LICENSE AGREEMENT, AND SUBJECT TO CIVIL AND CRIMINAL PENALTIES THEREUNDER.

100879786

Official." It shall be unlawful for any person to enter such structure except for the purpose of securing the structure, making the required repairs, removing the hazardous condition or of demolishing the same.

109.2 Temporary safeguards. Notwithstanding other provisions of this code, whenever, in the opinion of the *code official*, there is *imminent danger* due to an unsafe condition, the *code official* shall order the necessary work to be done, including the boarding up of openings, to render such structure temporarily safe whether or not the legal procedure herein described has been instituted; and shall cause such other action to be taken as the *code official* deems necessary to meet such emergency.

109.3 Closing streets. When necessary for public safety, the *code official* shall temporarily close structures and close, or order the authority having jurisdiction to close, sidewalks, streets, *public ways* and places adjacent to unsafe structures, and prohibit the same from being utilized.

109.4 Emergency repairs. For the purposes of this section, the *code official* shall employ the necessary labor and materials to perform the required work as expeditiously as possible.

109.5 Costs of emergency repairs. Costs incurred in the performance of emergency work shall be paid by the jurisdiction. The legal counsel of the jurisdiction shall institute appropriate action against the *owner* of the *premises* or owner's authorized agent where the unsafe structure is or was located for the recovery of such costs.

109.6 Hearing. Any person ordered to take emergency measures shall comply with such order forthwith. Any affected person shall thereafter, upon petition directed to the appeals board, be afforded a hearing as described in this code.

SECTION 110
DEMOLITION

110.1 General. The *code official* shall order the *owner* or owner's authorized agent of any *premises* upon which is located any structure, which in the *code official's* or owner's authorized agent judgment after review is so deteriorated or dilapidated or has become so out of repair as to be dangerous, unsafe, insanitary or otherwise unfit for human habitation or occupancy, and such that it is unreasonable to repair the structure, to demolish and remove such structure; or if such structure is capable of being made safe by repairs, to repair and make safe and sanitary, or to board up and hold for future repair or to demolish and remove at the *owner's* option; or where there has been a cessation of normal construction of any structure for a period of more than two years, the *code official* shall order the *owner* or owner's authorized agent to demolish and remove such structure, or board up until future repair. Boarding the building up for future repair shall not extend beyond one year, unless *approved* by the building official.

110.2 Notices and orders. Notices and orders shall comply with Section 107.

110.3 Failure to comply. If the *owner* of a *premises* or owner's authorized agent fails to comply with a demolition order within the time prescribed, the *code official* shall cause the structure to be demolished and removed, either through an available public agency or by contract or arrangement with private persons, and the cost of such demolition and removal shall be charged against the real estate upon which the structure is located and shall be a lien upon such real estate.

110.4 Salvage materials. Where any structure has been ordered demolished and removed, the governing body or other designated officer under said contract or arrangement aforesaid shall have the right to sell the salvage and valuable materials. The net proceeds of such sale, after deducting the expenses of such demolition and removal, shall be promptly remitted with a report of such sale or transaction, including the items of expense and the amounts deducted, for the person who is entitled thereto, subject to any order of a court. If such a surplus does not remain to be turned over, the report shall so state.

SECTION 111
MEANS OF APPEAL

[A] 111.1 Application for appeal. Any person directly affected by a decision of the *code official* or a notice or order issued under this code shall have the right to appeal to the board of appeals, provided that a written application for appeal is filed within 20 days after the day the decision, notice or order was served. An application for appeal shall be based on a claim that the true intent of this code or the rules legally adopted thereunder have been incorrectly interpreted, the provisions of this code do not fully apply, or the requirements of this code are adequately satisfied by other means.

[A] 111.2 Membership of board. The board of appeals shall consist of not less than three members who are qualified by experience and training to pass on matters pertaining to property maintenance and who are not employees of the jurisdiction. The *code official* shall be an ex-officio member but shall not vote on any matter before the board. The board shall be appointed by the chief appointing authority, and shall serve staggered and overlapping terms.

[A] 111.2.1 Alternate members. The chief appointing authority shall appoint not less than two alternate members who shall be called by the board chairman to hear appeals during the absence or disqualification of a member. Alternate members shall possess the qualifications required for board membership.

[A] 111.2.2 Chairman. The board shall annually select one of its members to serve as chairman.

[A] 111.2.3 Disqualification of member. A member shall not hear an appeal in which that member has a personal, professional or financial interest.

[A] 111.2.4 Secretary. The chief administrative officer shall designate a qualified person to serve as secretary to the board. The secretary shall file a detailed record of all proceedings in the office of the chief administrative officer.

[A] 111.2.5 Compensation of members. Compensation of members shall be determined by law.

INTERNATIONAL CODE COUNCIL®

Copyright © 2017 ICC. ALL RIGHTS RESERVED. Accessed by Ashley Stathatos (astathatos@annatexas.gov), (-) Order Number #100879786 on May 06, 2020 08:14 AM (PDT) pursuant to License Agreement with ICC. No further reproduction, no further reproductions by any third party, or distribution authorized. Single user only, copying and networking prohibited. ANY UNAUTHORIZED REPRODUCTION OR DISTRIBUTION IS A VIOLATION OF THE FEDERAL COPYRIGHT ACT AND THE LICENSE AGREEMENT, AND SUBJECT TO CIVIL AND CRIMINAL PENALTIES THEREUNDER.

100879786

[A] 111.3 Notice of meeting. The board shall meet upon notice from the chairman, within 20 days of the filing of an appeal, or at stated periodic meetings.

[A] 111.4 Open hearing. Hearings before the board shall be open to the public. The appellant, the appellant's representative, the *code official* and any person whose interests are affected shall be given an opportunity to be heard. A quorum shall consist of not less than two-thirds of the board membership.

[A] 111.4.1 Procedure. The board shall adopt and make available to the public through the secretary procedures under which a hearing will be conducted. The procedures shall not require compliance with strict rules of evidence, but shall mandate that only relevant information be received.

[A] 111.5 Postponed hearing. When the full board is not present to hear an appeal, either the appellant or the appellant's representative shall have the right to request a postponement of the hearing.

[A] 111.6 Board decision. The board shall modify or reverse the decision of the *code official* only by a concurring vote of a majority of the total number of appointed board members.

[A] 111.6.1 Records and copies. The decision of the board shall be recorded. Copies shall be furnished to the appellant and to the *code official*.

[A] 111.6.2 Administration. The *code official* shall take immediate action in accordance with the decision of the board.

[A] 111.7 Court review. Any person, whether or not a previous party of the appeal, shall have the right to apply to the appropriate court for a writ of certiorari to correct errors of law. Application for review shall be made in the manner and time required by law following the filing of the decision in the office of the chief administrative officer.

[A] 111.8 Stays of enforcement. Appeals of notice and orders (other than *Imminent Danger* notices) shall stay the enforcement of the notice and order until the appeal is heard by the appeals board.

SECTION 112
STOP WORK ORDER

[A] 112.1 Authority. Whenever the *code official* finds any work regulated by this code being performed in a manner contrary to the provisions of this code or in a dangerous or unsafe manner, the *code official* is authorized to issue a stop work order.

[A] 112.2 Issuance. A stop work order shall be in writing and shall be given to the *owner* of the property, to the *owner's* authorized agent, or to the person doing the work. Upon issuance of a stop work order, the cited work shall immediately cease. The stop work order shall state the reason for the order and the conditions under which the cited work is authorized to resume.

[A] 112.3 Emergencies. Where an emergency exists, the *code official* shall not be required to give a written notice prior to stopping the work.

[A] 112.4 Failure to comply. Any person who shall continue any work after having been served with a stop work order, except such work as that person is directed to perform to remove a violation or unsafe condition, shall be liable to a fine of not less than **[AMOUNT]** dollars or more than **[AMOUNT]** dollars.

PUBLICATE

INTERNATIONAL CODE COUNCIL®
Copyright © 2017 ICC. ALL RIGHTS RESERVED. Accessed by Ashley Stathatos (astathatos@annatexas.gov), (-) Order Number #100879786 on May 06, 2020 08:14 AM (PDT) pursuant to License Agreement with ICC. No further reproduction, no further reproductions by any third party, or distribution authorized. Single user only, copying and networking prohibited. ANY UNAUTHORIZED REPRODUCTION OR DISTRIBUTION IS A VIOLATION OF THE FEDERAL COPYRIGHT ACT AND THE LICENSE AGREEMENT, AND SUBJECT TO CIVIL AND CRIMINAL PENALTIES THEREUNDER.

100879786

DUPLICATE

Copyright © 2017 ICC. ALL RIGHTS RESERVED. Accessed by Ashley Stathatos (astathatos@annatexas.gov), (-) Order Number #100879786 on May 06, 2020 08:14 AM (PDT) pursuant to License Agreement with ICC. No further reproduction, no further reproductions by any third party, or distribution authorized. Single user only, copying and networking prohibited. ANY UNAUTHORIZED REPRODUCTION OR DISTRIBUTION IS A VIOLATION OF THE FEDERAL COPYRIGHT ACT AND THE LICENSE AGREEMENT, AND SUBJECT TO CIVIL AND CRIMINAL PENALTIES THEREUNDER.

CHAPTER 2
DEFINITIONS

User note:

About this chapter: *Codes, by their very nature, are technical documents. Every word, term and punctuation mark can add to or change the meaning of a technical requirement. It is necessary to maintain a consensus on the specific meaning of each term contained in the code. Chapter 2 performs this function by stating clearly what specific terms mean for the purpose of the code.*

SECTION 201
GENERAL

201.1 Scope. Unless otherwise expressly stated, the following terms shall, for the purposes of this code, have the meanings shown in this chapter.

201.2 Interchangeability. Words stated in the present tense include the future; words stated in the masculine gender include the feminine and neuter; the singular number includes the plural and the plural, the singular.

201.3 Terms defined in other codes. Where terms are not defined in this code and are defined in the *International Building Code, International Existing Building Code, International Fire Code, International Fuel Gas Code, International Mechanical Code, International Plumbing Code, International Residential Code, International Zoning Code* or NFPA 70, such terms shall have the meanings ascribed to them as stated in those codes.

201.4 Terms not defined. Where terms are not defined through the methods authorized by this section, such terms shall have ordinarily accepted meanings such as the context implies.

201.5 Parts. Whenever the words "*dwelling unit*," "dwelling," "*premises*," "building," "*rooming house*," "*rooming unit*," "*housekeeping unit*" or "story" are stated in this code, they shall be construed as though they were followed by the words "or any part thereof."

SECTION 202
GENERAL DEFINITIONS

ANCHORED. Secured in a manner that provides positive connection.

[A] APPROVED. Acceptable to the *code official*.

BASEMENT. That portion of a building that is partly or completely below grade.

BATHROOM. A room containing plumbing fixtures including a bathtub or shower.

BEDROOM. Any room or space used or intended to be used for sleeping purposes in either a dwelling or *sleeping unit*.

[A] CODE OFFICIAL. The official who is charged with the administration and enforcement of this code, or any duly authorized representative.

CONDEMN. To adjudge unfit for *occupancy*.

COST OF SUCH DEMOLITION OR EMERGENCY REPAIRS. The costs shall include the actual costs of the demolition or repair of the structure less revenues obtained if salvage was conducted prior to demolition or repair. Costs shall include, but not be limited to, expenses incurred or necessitated related to demolition or emergency repairs, such as asbestos survey and abatement if necessary; costs of inspectors, testing agencies or experts retained relative to the demolition or emergency repairs; costs of testing; surveys for other materials that are controlled or regulated from being dumped in a landfill; title searches; mailing(s); postings; recording; and attorney fees expended for recovering of the cost of emergency repairs or to obtain or enforce an order of demolition made by a *code official*, the governing body or board of appeals.

DETACHED. When a structural element is physically disconnected from another and that connection is necessary to provide a positive connection.

DETERIORATION. To weaken, disintegrate, corrode, rust or decay and lose effectiveness.

[A] DWELLING UNIT. A single unit providing complete, independent living facilities for one or more persons, including permanent provisions for living, sleeping, eating, cooking and sanitation.

[Z] EASEMENT. That portion of land or property reserved for present or future use by a person or agency other than the legal fee *owner*(s) of the property. The *easement* shall be permitted to be for use under, on or above said lot or lots.

EQUIPMENT SUPPORT. Those structural members or assemblies of members or manufactured elements, including braces, frames, lugs, snuggers, hangers or saddles, that transmit gravity load, lateral load and operating load between the equipment and the structure.

EXTERIOR PROPERTY. The open space on the *premises* and on adjoining property under the control of *owners* or *operators* of such *premises*.

GARBAGE. The animal or vegetable waste resulting from the handling, preparation, cooking and consumption of food.

[BE] GUARD. A building component or a system of building components located at or near the open sides of elevated walking surfaces that minimizes the possibility of a fall from the walking surface to a lower level.

[BG] HABITABLE SPACE. Space in a structure for living, sleeping, eating or cooking. *Bathrooms*, *toilet rooms*, closets,

INTERNATIONAL CODE COUNCIL®
Copyright © 2017 ICC. ALL RIGHTS RESERVED. Accessed by Ashley Stathatos (astathatos@annatexas.gov), (-) Order Number #100879786 on May 06, 2020 08:14 AM (PDT) pursuant to License Agreement with ICC. No further reproduction, no further reproductions by any third party, or distribution authorized. Single user only, copying and networking prohibited. ANY UNAUTHORIZED REPRODUCTION OR DISTRIBUTION IS A VIOLATION OF THE FEDERAL COPYRIGHT ACT AND THE LICENSE AGREEMENT, AND SUBJECT TO CIVIL AND CRIMINAL PENALTIES THEREUNDER.

100879786

halls, storage or utility spaces, and similar areas are not considered *habitable spaces*.

[A] HISTORIC BUILDING. Any building or structure that is one or more of the following:

1. Listed or certified as eligible for listing, by the State Historic Preservation Officer or the Keeper of the National Register of Historic Places, in the National Register of Historic Places.
2. Designated as historic under an applicable state or local law.
3. Certified as a contributing resource within a National Register or state or locally designated historic district.

HOUSEKEEPING UNIT. A room or group of rooms forming a single *habitable space* equipped and intended to be used for living, sleeping, cooking and eating that does not contain, within such a unit, a toilet, lavatory and bathtub or shower.

IMMINENT DANGER. A condition that could cause serious or life-threatening injury or death at any time.

INFESTATION. The presence, within or contiguous to, a structure or *premises* of insects, rodents, vermin or other pests.

INOPERABLE MOTOR VEHICLE. A vehicle that cannot be driven upon the public streets for reason including but not limited to being unlicensed, wrecked, abandoned, in a state of disrepair, or incapable of being moved under its own power.

[A] LABELED. Equipment, materials or products to which have been affixed a label, seal, symbol or other identifying mark of a nationally recognized testing laboratory, *approved* agency or other organization concerned with product evaluation that maintains periodic inspection of the production of the above-*labeled* items and whose labeling indicates either that the equipment, material or product meets identified standards or has been tested and found suitable for a specified purpose.

LET FOR OCCUPANCY or LET. To permit, provide or offer possession or *occupancy* of a dwelling, *dwelling unit*, *rooming unit*, building, premise or structure by a person who is or is not the legal *owner* of record thereof, pursuant to a written or unwritten lease, agreement or license, or pursuant to a recorded or unrecorded agreement of contract for the sale of land.

NEGLECT. The lack of proper maintenance for a building or *structure*.

[A] OCCUPANCY. The purpose for which a building or portion thereof is utilized or occupied.

OCCUPANT. Any individual living or sleeping in a building, or having possession of a space within a building.

OPENABLE AREA. That part of a window, skylight or door which is available for unobstructed *ventilation* and which opens directly to the outdoors.

OPERATOR. Any person who has charge, care or control of a structure or *premises* that is let or offered for *occupancy*.

[A] OWNER. Any person, agent, *operator*, firm or corporation having legal or equitable interest in the property; or recorded in the official records of the state, county or municipality as holding title to the property; or otherwise having control of the property, including the guardian of the estate of any such person, and the executor or administrator of the estate of such person if ordered to take possession of real property by a court.

[A] PERSON. An individual, corporation, partnership or any other group acting as a unit.

PEST ELIMINATION. The control and elimination of insects, rodents or other pests by eliminating their harborage places; by removing or making inaccessible materials that serve as their food or water; by other *approved pest elimination* methods.

[A] PREMISES. A lot, plot or parcel of land, *easement* or *public way*, including any structures thereon.

[A] PUBLIC WAY. Any street, alley or other parcel of land that: is open to the outside air; leads to a street; has been deeded, dedicated or otherwise permanently appropriated to the public for public use; and has a clear width and height of not less than 10 feet (3048 mm).

ROOMING HOUSE. A building arranged or occupied for lodging, with or without meals, for compensation and not occupied as a one- or two-family dwelling.

ROOMING UNIT. Any room or group of rooms forming a single habitable unit occupied or intended to be occupied for sleeping or living, but not for cooking purposes.

RUBBISH. Combustible and noncombustible waste materials, except garbage; the term shall include the residue from the burning of wood, coal, coke and other combustible materials, paper, rags, cartons, boxes, wood, excelsior, rubber, leather, tree branches, *yard* trimmings, tin cans, metals, mineral matter, glass, crockery and dust and other similar materials.

[A] SLEEPING UNIT. A room or space in which people sleep, which can also include permanent provisions for living, eating and either sanitation or kitchen facilities, but not both. Such rooms and spaces that are also part of a *dwelling unit* are not *sleeping units*.

STRICT LIABILITY OFFENSE. An offense in which the prosecution in a legal proceeding is not required to prove criminal intent as a part of its case. It is enough to prove that the defendant either did an act which was prohibited, or failed to do an act which the defendant was legally required to do.

[A] STRUCTURE. That which is built or constructed.

TENANT. A person, corporation, partnership or group, whether or not the legal *owner* of record, occupying a building or portion thereof as a unit.

TOILET ROOM. A room containing a water closet or urinal but not a bathtub or shower.

ULTIMATE DEFORMATION. The deformation at which failure occurs and that shall be deemed to occur if the sustainable load reduces to 80 percent or less of the maximum strength.

[M] VENTILATION. The natural or mechanical process of supplying conditioned or unconditioned air to, or removing such air from, any space.

WORKMANLIKE. Executed in a skilled manner; e.g., generally plumb, level, square, in line, undamaged and without marring adjacent work.

[Z] YARD. An open space on the same lot with a structure.

DRAFT

INTERNATIONAL CODE COUNCIL®

Copyright © 2017 ICC. ALL RIGHTS RESERVED. Accessed by Ashley Stathatos (astathatos@annatexas.gov), (-) Order Number #100879786 on May 06, 2020 08:14 AM (PDT) pursuant to License Agreement with ICC. No further reproduction, no further reproductions by any third party, or distribution authorized. Single user only, copying and networking prohibited. ANY UNAUTHORIZED REPRODUCTION OR DISTRIBUTION IS A VIOLATION OF THE FEDERAL COPYRIGHT ACT AND THE LICENSE AGREEMENT, AND SUBJECT TO CIVIL AND CRIMINAL PENALTIES THEREUNDER.

CHAPTER 3
GENERAL REQUIREMENTS

User note:

About this chapter: *Chapter 3 is broad in scope and includes a variety of requirements for the maintenance of exterior property areas, as well as the interior and exterior elements of the structure, that are intended to maintain a minimum level of safety and sanitation for both the general public and the occupants of a structure, and to maintain a building's structural and weather-resistance performance. Specifically, Chapter 3 contains criteria for the maintenance of building components; vacant structures and land; the safety, sanitation and appearance of the interior and exterior of structures and all exterior property areas; accessory structures; extermination of insects and rodents; access barriers to swimming pools, spas and hot tubs; vehicle storage and owner/occupant responsibilities.*

SECTION 301
GENERAL

301.1 Scope. The provisions of this chapter shall govern the minimum conditions and the responsibilities of persons for maintenance of structures, equipment and *exterior property*.

301.2 Responsibility. The *owner* of the *premises* shall maintain the structures and *exterior property* in compliance with these requirements, except as otherwise provided for in this code. A person shall not occupy as owner-occupant or permit another person to occupy *premises* that are not in a sanitary and safe condition and that do not comply with the requirements of this chapter. *Occupants* of a *dwelling unit*, *rooming unit* or *housekeeping unit* are responsible for keeping in a clean, sanitary and safe condition that part of the *dwelling unit*, *rooming unit*, *housekeeping unit* or *premises* they occupy and control.

301.3 Vacant structures and land. Vacant structures and *premises* thereof or vacant land shall be maintained in a clean, safe, secure and sanitary condition as provided herein so as not to cause a blighting problem or adversely affect the public health or safety.

SECTION 302
EXTERIOR PROPERTY AREAS

302.1 Sanitation. *Exterior property* and *premises* shall be maintained in a clean, safe and sanitary condition. The *occupant* shall keep that part of the *exterior property* that such *occupant* occupies or controls in a clean and sanitary condition.

302.2 Grading and drainage. *Premises* shall be graded and maintained to prevent the erosion of soil and to prevent the accumulation of stagnant water thereon, or within any structure located thereon.

Exception: *Approved* retention areas and reservoirs.

302.3 Sidewalks and driveways. Sidewalks, walkways, stairs, driveways, parking spaces and similar areas shall be kept in a proper state of repair, and maintained free from hazardous conditions.

302.4 Weeds. *Premises* and *exterior property* shall be maintained free from weeds or plant growth in excess of **[JURISDICTION TO INSERT HEIGHT IN INCHES]**. Noxious weeds shall be prohibited. Weeds shall be defined as all grasses, annual plants and vegetation, other than trees or shrubs provided; however, this term shall not include cultivated flowers and gardens.

Upon failure of the *owner* or agent having charge of a property to cut and destroy weeds after service of a notice of violation, they shall be subject to prosecution in accordance with Section 106.3 and as prescribed by the authority having jurisdiction. Upon failure to comply with the notice of violation, any duly authorized employee of the jurisdiction or contractor hired by the jurisdiction shall be authorized to enter upon the property in violation and cut and destroy the weeds growing thereon, and the costs of such removal shall be paid by the *owner* or agent responsible for the property.

302.5 Rodent harborage. Structures and *exterior property* shall be kept free from rodent harborage and *infestation*. Where rodents are found, they shall be promptly exterminated by *approved* processes that will not be injurious to human health. After pest elimination, proper precautions shall be taken to eliminate rodent harborage and prevent reinfestation.

302.6 Exhaust vents. Pipes, ducts, conductors, fans or blowers shall not discharge gases, steam, vapor, hot air, grease, smoke, odors or other gaseous or particulate wastes directly on abutting or adjacent public or private property or that of another *tenant*.

302.7 Accessory structures. Accessory structures, including *detached* garages, fences and walls, shall be maintained structurally sound and in good repair.

302.8 Motor vehicles. Except as provided for in other regulations, inoperative or unlicensed motor vehicles shall not be parked, kept or stored on any *premises*, and vehicles shall not at any time be in a state of major disassembly, disrepair, or in the process of being stripped or dismantled. Painting of vehicles is prohibited unless conducted inside an *approved* spray booth.

Exception: A vehicle of any type is permitted to undergo major overhaul, including body work, provided that such work is performed inside a structure or similarly enclosed area designed and *approved* for such purposes.

INTERNATIONAL CODE COUNCIL®
Copyright © 2017 ICC. ALL RIGHTS RESERVED. Accessed by Ashley Stathatos (astathatos@annatexas.gov), (-) Order Number #100879786 on May 06, 2020 08:14 AM (PDT) pursuant to License Agreement with ICC. No further reproduction, no further reproductions by any third party, or distribution authorized. Single user only, copying and networking prohibited. ANY UNAUTHORIZED REPRODUCTION OR DISTRIBUTION IS A VIOLATION OF THE FEDERAL COPYRIGHT ACT AND THE LICENSE AGREEMENT, AND SUBJECT TO CIVIL AND CRIMINAL PENALTIES THEREUNDER.

100879786

302.9 Defacement of property. A person shall not willfully or wantonly damage, mutilate or deface any exterior surface of any structure or building on any private or public property by placing thereon any marking, carving or graffiti.

It shall be the responsibility of the *owner* to restore said surface to an *approved* state of maintenance and repair.

SECTION 303
SWIMMING POOLS, SPAS AND HOT TUBS

303.1 Swimming pools. Swimming pools shall be maintained in a clean and sanitary condition, and in good repair.

303.2 Enclosures. Private swimming pools, hot tubs and spas, containing water more than 24 inches (610 mm) in depth shall be completely surrounded by a fence or barrier not less than 48 inches (1219 mm) in height above the finished ground level measured on the side of the barrier away from the pool. Gates and doors in such barriers shall be self-closing and self-latching. Where the self-latching device is less than 54 inches (1372 mm) above the bottom of the gate, the release mechanism shall be located on the pool side of the gate. Self-closing and self-latching gates shall be maintained such that the gate will positively close and latch when released from an open position of 6 inches (152 mm) from the gatepost. An existing pool enclosure shall not be removed, replaced or changed in a manner that reduces its effectiveness as a safety barrier.

Exception: Spas or hot tubs with a safety cover that complies with ASTM F1346 shall be exempt from the provisions of this section.

SECTION 304
EXTERIOR STRUCTURE

304.1 General. The exterior of a structure shall be maintained in good repair, structurally sound and sanitary so as not to pose a threat to the public health, safety or welfare.

304.1.1 Unsafe conditions. The following conditions shall be determined as unsafe and shall be repaired or replaced to comply with the *International Building Code* or the *International Existing Building Code* as required for existing buildings:

1. The nominal strength of any structural member is exceeded by nominal loads, the load effects or the required strength.
2. The *anchorage* of the floor or roof to walls or columns, and of walls and columns to foundations is not capable of resisting all nominal loads or load effects.
3. Structures or components thereof that have reached their limit state.
4. Siding and masonry joints including joints between the building envelope and the perimeter of windows, doors and skylights are not maintained, weather resistant or water tight.
5. Structural members that have evidence of *deterioration* or that are not capable of safely supporting all nominal loads and load effects.
6. Foundation systems that are not firmly supported by footings, are not plumb and free from open cracks and breaks, are not properly *anchored* or are not capable of supporting all nominal loads and resisting all load effects.
7. Exterior walls that are not *anchored* to supporting and supported elements or are not plumb and free of holes, cracks or breaks and loose or rotting materials, are not properly *anchored* or are not capable of supporting all nominal loads and resisting all load effects.
8. Roofing or roofing components that have defects that admit rain, roof surfaces with inadequate drainage, or any portion of the roof framing that is not in good repair with signs of *deterioration*, fatigue or without proper anchorage and incapable of supporting all nominal loads and resisting all load effects.
9. Flooring and flooring components with defects that affect serviceability or flooring components that show signs of *deterioration* or fatigue, are not properly *anchored* or are incapable of supporting all nominal loads and resisting all load effects.
10. Veneer, cornices, belt courses, corbels, trim, wall facings and similar decorative features not properly anchored or that are anchored with connections not capable of supporting all nominal loads and resisting all load effects.
11. Overhang extensions or projections including, but not limited to, trash chutes, canopies, marquees, signs, awnings, fire escapes, standpipes and exhaust ducts not properly *anchored* or that are *anchored* with connections not capable of supporting all nominal loads and resisting all load effects.
12. Exterior stairs, decks, porches, balconies and all similar appurtenances attached thereto, including *guards* and handrails, are not structurally sound, not properly *anchored* or that are *anchored* with connections not capable of supporting all nominal loads and resisting all load effects.
13. Chimneys, cooling towers, smokestacks and similar appurtenances not structurally sound or not properly *anchored,* or that are anchored with connections not capable of supporting all nominal loads and resisting all load effects.

Exceptions:

1. Where substantiated otherwise by an *approved* method.
2. Demolition of unsafe conditions shall be permitted where *approved* by the *code official.*

304.2 Protective treatment. Exterior surfaces, including but not limited to, doors, door and window frames, cornices, porches, trim, balconies, decks and fences, shall be maintained in good condition. Exterior wood surfaces, other than

INTERNATIONAL CODE COUNCIL®

Copyright © 2017 ICC. ALL RIGHTS RESERVED. Accessed by Ashley Stathatos (astathatos@annatexas.gov), (-) Order Number #100879786 on May 06, 2020 08:14 AM (PDT) pursuant to License Agreement with ICC. No further reproduction, no further reproductions by any third party, or distribution authorized. Single user only, copying and networking prohibited. ANY UNAUTHORIZED REPRODUCTION OR DISTRIBUTION IS A VIOLATION OF THE FEDERAL COPYRIGHT ACT AND THE LICENSE AGREEMENT, AND SUBJECT TO CIVIL AND CRIMINAL PENALTIES THEREUNDER.

100879786

decay-resistant woods, shall be protected from the elements and decay by painting or other protective covering or treatment. Peeling, flaking and chipped paint shall be eliminated and surfaces repainted. Siding and masonry joints, as well as those between the building envelope and the perimeter of windows, doors and skylights, shall be maintained weather resistant and water tight. Metal surfaces subject to rust or corrosion shall be coated to inhibit such rust and corrosion, and surfaces with rust or corrosion shall be stabilized and coated to inhibit future rust and corrosion. Oxidation stains shall be removed from exterior surfaces. Surfaces designed for stabilization by oxidation are exempt from this requirement.

[F] 304.3 Premises identification. Buildings shall have *approved* address numbers placed in a position to be plainly legible and visible from the street or road fronting the property. These numbers shall contrast with their background. Address numbers shall be Arabic numerals or alphabet letters. Numbers shall be not less than 4 inches (102 mm) in height with a minimum stroke width of 0.5 inch (12.7 mm).

304.4 Structural members. Structural members shall be maintained free from *deterioration*, and shall be capable of safely supporting the imposed dead and live loads.

304.5 Foundation walls. Foundation walls shall be maintained plumb and free from open cracks and breaks and shall be kept in such condition so as to prevent the entry of rodents and other pests.

304.6 Exterior walls. Exterior walls shall be free from holes, breaks, and loose or rotting materials; and maintained weatherproof and properly surface coated where required to prevent *deterioration*.

304.7 Roofs and drainage. The roof and flashing shall be sound, tight and not have defects that admit rain. Roof drainage shall be adequate to prevent dampness or *deterioration* in the walls or interior portion of the structure. Roof drains, gutters and downspouts shall be maintained in good repair and free from obstructions. Roof water shall not be discharged in a manner that creates a public nuisance.

304.8 Decorative features. Cornices, belt courses, corbels, terra cotta trim, wall facings and similar decorative features shall be maintained in good repair with proper anchorage and in a safe condition.

304.9 Overhang extensions. Overhang extensions including, but not limited to, canopies, marquees, signs, metal awnings, fire escapes, standpipes and exhaust ducts shall be maintained in good repair and be properly *anchored* so as to be kept in a sound condition. Where required, all exposed surfaces of metal or wood shall be protected from the elements and against decay or rust by periodic application of weather-coating materials, such as paint or similar surface treatment.

304.10 Stairways, decks, porches and balconies. Every exterior stairway, deck, porch and balcony, and all appurtenances attached thereto, shall be maintained structurally sound, in good repair, with proper anchorage and capable of supporting the imposed loads.

304.11 Chimneys and towers. Chimneys, cooling towers, smoke stacks, and similar appurtenances shall be maintained structurally safe and sound, and in good repair. Exposed surfaces of metal or wood shall be protected from the elements and against decay or rust by periodic application of weather-coating materials, such as paint or similar surface treatment.

304.12 Handrails and guards. Every handrail and *guard* shall be firmly fastened and capable of supporting normally imposed loads and shall be maintained in good condition.

304.13 Window, skylight and door frames. Every window, skylight, door and frame shall be kept in sound condition, good repair and weather tight.

304.13.1 Glazing. Glazing materials shall be maintained free from cracks and holes.

304.13.2 Openable windows. Every window, other than a fixed window, shall be easily openable and capable of being held in position by window hardware.

304.14 Insect screens. During the period from **[DATE]** to **[DATE]**, every door, window and other outside opening required for *ventilation* of habitable rooms, food preparation areas, food service areas or any areas where products to be included or utilized in food for human consumption are processed, manufactured, packaged or stored shall be supplied with *approved* tightly fitting screens of minimum 16 mesh per inch (16 mesh per 25 mm), and every screen door used for insect control shall have a self-closing device in good working condition.

Exception: Screens shall not be required where other *approved* means, such as air curtains or insect repellent fans, are employed.

304.15 Doors. Exterior doors, door assemblies, operator systems if provided, and hardware shall be maintained in good condition. Locks at all entrances to dwelling units and sleeping units shall tightly secure the door. Locks on means of egress doors shall be in accordance with Section 702.3.

304.16 Basement hatchways. Every *basement* hatchway shall be maintained to prevent the entrance of rodents, rain and surface drainage water.

304.17 Guards for basement windows. Every *basement* window that is openable shall be supplied with rodent shields, storm windows or other *approved* protection against the entry of rodents.

304.18 Building security. Doors, windows or hatchways for *dwelling units*, room units or *housekeeping units* shall be provided with devices designed to provide security for the *occupants* and property within.

304.18.1 Doors. Doors providing access to a *dwelling unit*, *rooming unit* or *housekeeping unit* that is rented, leased or let shall be equipped with a deadbolt lock designed to be readily openable from the side from which egress is to be made without the need for keys, special knowledge or effort and shall have a minimum lock throw of 1 inch (25 mm). Such deadbolt locks shall be installed according to the manufacturer's specifications and maintained in good working order. For the purpose of this section, a sliding bolt shall not be considered an acceptable deadbolt lock.

304.18.2 Windows. Operable windows located in whole or in part within 6 feet (1828 mm) above ground level or a

INTERNATIONAL CODE COUNCIL®
Copyright © 2017 ICC. ALL RIGHTS RESERVED. Accessed by Ashley Stathatos (astathatos@annatexas.gov), (-) Order Number #100879786 on May 06, 2020 08:14 AM (PDT) pursuant to License Agreement with ICC. No further reproduction, no further reproductions by any third party, or distribution authorized. Single user only, copying and networking prohibited. ANY UNAUTHORIZED REPRODUCTION OR DISTRIBUTION IS A VIOLATION OF THE FEDERAL COPYRIGHT ACT AND THE LICENSE AGREEMENT, AND SUBJECT TO CIVIL AND CRIMINAL PENALTIES THEREUNDER.

100879786

walking surface below that provide access to a *dwelling unit*, *rooming unit* or *housekeeping unit* that is rented, leased or let shall be equipped with a window sash locking device.

304.18.3 Basement hatchways. *Basement* hatchways that provide access to a *dwelling unit*, *rooming unit* or *housekeeping unit* that is rented, leased or let shall be equipped with devices that secure the units from unauthorized entry.

304.19 Gates. Exterior gates, gate assemblies, operator systems if provided, and hardware shall be maintained in good condition. Latches at all entrances shall tightly secure the gates.

SECTION 305
INTERIOR STRUCTURE

305.1 General. The interior of a structure and equipment therein shall be maintained in good repair, structurally sound and in a sanitary condition. *Occupants* shall keep that part of the structure that they occupy or control in a clean and sanitary condition. Every *owner* of a structure containing a *rooming house*, *housekeeping units*, a hotel, a dormitory, two or more *dwelling units* or two or more nonresidential occupancies, shall maintain, in a clean and sanitary condition, the shared or public areas of the structure and *exterior property*.

305.1.1 Unsafe conditions. The following conditions shall be determined as unsafe and shall be repaired or replaced to comply with the *International Building Code* or the *International Existing Building Code* as required for existing buildings:

1. The nominal strength of any structural member is exceeded by nominal loads, the load effects or the required strength.
2. The anchorage of the floor or roof to walls or columns, and of walls and columns to foundations is not capable of resisting all nominal loads or load effects.
3. Structures or components thereof that have reached their limit state.
4. Structural members are incapable of supporting nominal loads and load effects.
5. Stairs, landings, balconies and all similar walking surfaces, including *guards* and handrails, are not structurally sound, not properly *anchored* or are *anchored* with connections not capable of supporting all nominal loads and resisting all load effects.
6. Foundation systems that are not firmly supported by footings are not plumb and free from open cracks and breaks, are not properly *anchored* or are not capable of supporting all nominal loads and resisting all load effects.

Exceptions:

1. Where substantiated otherwise by an *approved* method.
2. Demolition of unsafe conditions shall be permitted where *approved* by the *code official*.

305.2 Structural members. Structural members shall be maintained structurally sound, and be capable of supporting the imposed loads.

305.3 Interior surfaces. Interior surfaces, including windows and doors, shall be maintained in good, clean and sanitary condition. Peeling, chipping, flaking or abraded paint shall be repaired, removed or covered. Cracked or loose plaster, decayed wood and other defective surface conditions shall be corrected.

305.4 Stairs and walking surfaces. Every stair, ramp, landing, balcony, porch, deck or other walking surface shall be maintained in sound condition and good repair.

305.5 Handrails and guards. Every handrail and *guard* shall be firmly fastened and capable of supporting normally imposed loads and shall be maintained in good condition.

305.6 Interior doors. Every interior door shall fit reasonably well within its frame and shall be capable of being opened and closed by being properly and securely attached to jambs, headers or tracks as intended by the manufacturer of the attachment hardware.

SECTION 306
COMPONENT SERVICEABILITY

306.1 General. The components of a structure and equipment therein shall be maintained in good repair, structurally sound and in a sanitary condition.

306.1.1 Unsafe conditions. Where any of the following conditions cause the component or system to be beyond its limit state, the component or system shall be determined as unsafe and shall be repaired or replaced to comply with the *International Building Code* or the *International Existing Building Code* as required for existing buildings:

1. Soils that have been subjected to any of the following conditions:
   - 1.1. Collapse of footing or foundation system.
   - 1.2. Damage to footing, foundation, concrete or other structural element due to soil expansion.
   - 1.3. Adverse effects to the design strength of footing, foundation, concrete or other structural element due to a chemical reaction from the soil.
   - 1.4. Inadequate soil as determined by a geotechnical investigation.
   - 1.5. Where the allowable bearing capacity of the soil is in doubt.
   - 1.6. Adverse effects to the footing, foundation, concrete or other structural element due to the ground water table.
2. Concrete that has been subjected to any of the following conditions:
   - 2.1. *Deterioration.*
   - 2.2. *Ultimate deformation.*
   - 2.3. Fractures.

INTERNATIONAL CODE COUNCIL®

Copyright © 2017 ICC. ALL RIGHTS RESERVED. Accessed by Ashley Stathatos (astathatos@annatexas.gov), (-) Order Number #100879786 on May 06, 2020 08:14 AM (PDT) pursuant to License Agreement with ICC. No further reproduction, no further reproductions by any third party, or distribution authorized. Single user only, copying and networking prohibited. ANY UNAUTHORIZED REPRODUCTION OR DISTRIBUTION IS A VIOLATION OF THE FEDERAL COPYRIGHT ACT AND THE LICENSE AGREEMENT, AND SUBJECT TO CIVIL AND CRIMINAL PENALTIES THEREUNDER.

100879786

2.4. Fissures.

2.5. Spalling.

2.6. Exposed reinforcement.

2.7. *Detached*, dislodged or failing connections.

3. Aluminum that has been subjected to any of the following conditions:

3.1. *Deterioration.*

3.2. Corrosion.

3.3. Elastic deformation.

3.4. *Ultimate deformation.*

3.5. Stress or strain cracks.

3.6. Joint fatigue.

3.7. *Detached*, dislodged or failing connections.

4. Masonry that has been subjected to any of the following conditions:

4.1. *Deterioration.*

4.2. *Ultimate deformation.*

4.3. Fractures in masonry or mortar joints.

4.4. Fissures in masonry or mortar joints.

4.5. Spalling.

4.6. Exposed reinforcement.

4.7. *Detached,* dislodged or failing connections.

5. Steel that has been subjected to any of the following conditions:

5.1. *Deterioration.*

5.2. Elastic deformation.

5.3. *Ultimate deformation.*

5.4. Metal fatigue.

5.5. *Detached,* dislodged or failing connections.

6. Wood that has been subjected to any of the following conditions:

6.1. Ultimate deformation.

6.2. Deterioration.

6.3. Damage from insects, rodents and other vermin.

6.4. Fire damage beyond charring.

6.5. Significant splits and checks.

6.6. Horizontal shear cracks.

6.7. Vertical shear cracks.

6.8. Inadequate support.

6.9. Detached, dislodged or failing connections.

6.10. Excessive cutting and notching.

Exceptions:

1. Where substantiated otherwise by an *approved* method.
2. Demolition of unsafe conditions shall be permitted where *approved* by the *code official.*

SECTION 307
HANDRAILS AND GUARDRAILS

307.1 General. Every exterior and interior flight of stairs having more than four risers shall have a handrail on one side of the stair and every open portion of a stair, landing, balcony, porch, deck, ramp or other walking surface that is more than 30 inches (762 mm) above the floor or grade below shall have *guards.* Handrails shall be not less than 30 inches (762 mm) in height or more than 42 inches (1067 mm) in height measured vertically above the nosing of the tread or above the finished floor of the landing or walking surfaces. *Guards* shall be not less than 30 inches (762 mm) in height above the floor of the landing, balcony, porch, deck, or ramp or other walking surface.

Exception: *Guards* shall not be required where exempted by the adopted building code.

SECTION 308
RUBBISH AND GARBAGE

308.1 Accumulation of rubbish or garbage. *Exterior property* and *premises,* and the interior of every structure, shall be free from any accumulation of *rubbish* or garbage.

308.2 Disposal of rubbish. Every *occupant* of a structure shall dispose of all *rubbish* in a clean and sanitary manner by placing such *rubbish* in *approved* containers.

308.2.1 Rubbish storage facilities. The *owner* of every occupied *premises* shall supply *approved* covered containers for *rubbish,* and the *owner* of the *premises* shall be responsible for the removal of *rubbish.*

308.2.2 Refrigerators. Refrigerators and similar equipment not in operation shall not be discarded, abandoned or stored on *premises* without first removing the doors.

308.3 Disposal of garbage. Every *occupant* of a structure shall dispose of garbage in a clean and sanitary manner by placing such garbage in an *approved* garbage disposal facility or *approved* garbage containers.

308.3.1 Garbage facilities. The *owner* of every dwelling shall supply one of the following: an *approved* mechanical food waste grinder in each *dwelling unit;* an *approved* incinerator unit in the structure available to the *occupants* in each *dwelling unit;* or an *approved* leakproof, covered, outside garbage container.

308.3.2 Containers. The *operator* of every establishment producing garbage shall provide, and at all times cause to be utilized, *approved* leakproof containers provided with close-fitting covers for the storage of such materials until removed from the *premises* for disposal.

SECTION 309
PEST ELIMINATION

309.1 Infestation. Structures shall be kept free from insect and rodent *infestation.* Structures in which insects or rodents are found shall be promptly exterminated by *approved* processes that will not be injurious to human health. After pest

INTERNATIONAL CODE COUNCIL®
Copyright © 2017 ICC. ALL RIGHTS RESERVED. Accessed by Ashley Stathatos (astathatos@annatexas.gov), (-) Order Number #100879786 on May 06, 2020 08:14 AM (PDT) pursuant to License Agreement with ICC. No further reproduction, no further reproductions by any third party, or distribution authorized. Single user only, copying and networking prohibited. ANY UNAUTHORIZED REPRODUCTION OR DISTRIBUTION IS A VIOLATION OF THE FEDERAL COPYRIGHT ACT AND THE LICENSE AGREEMENT, AND SUBJECT TO CIVIL AND CRIMINAL PENALTIES THEREUNDER.

100879786

elimination, proper precautions shall be taken to prevent reinfestation.

309.2 Owner. The *owner* of any structure shall be responsible for pest elimination within the structure prior to renting or leasing the structure.

309.3 Single occupant. The *occupant* of a one-family dwelling or of a single-*tenant* nonresidential structure shall be responsible for pest elimination on the *premises*.

309.4 Multiple occupancy. The *owner* of a structure containing two or more *dwelling units*, a multiple *occupancy*, a *rooming house* or a nonresidential structure shall be responsible for pest elimination in the public or shared areas of the structure and *exterior property*. If *infestation* is caused by failure of an *occupant* to prevent such *infestation* in the area occupied, the *occupant* and *owner* shall be responsible for pest elimination.

309.5 Occupant. The *occupant* of any structure shall be responsible for the continued rodent and pest-free condition of the structure.

> **Exception:** Where the *infestations* are caused by defects in the structure, the *owner* shall be responsible for pest elimination.

PUBLICATION

Copyright © 2017 ICC. ALL RIGHTS RESERVED. Accessed by Ashley Stathatos (astathatos@annatexas.gov), (-) Order Number #100879786 on May 06, 2020 08:14 AM (PDT) pursuant to License Agreement with ICC. No further reproduction, no further reproductions by any third party, or distribution authorized. Single user only, copying and networking prohibited. ANY UNAUTHORIZED REPRODUCTION OR DISTRIBUTION IS A VIOLATION OF THE FEDERAL COPYRIGHT ACT AND THE LICENSE AGREEMENT, AND SUBJECT TO CIVIL AND CRIMINAL PENALTIES THEREUNDER.

CHAPTER 4

LIGHT, VENTILATION AND OCCUPANCY LIMITATIONS

User note:

About this chapter: *Chapter 4 sets forth requirements to establish the minimum environment for occupiable and habitable buildings by establishing the minimum criteria for light and ventilation and identifying occupancy limitations including minimum room width and area, minimum ceiling height and restrictions to prevent overcrowding.*

SECTION 401
GENERAL

401.1 Scope. The provisions of this chapter shall govern the minimum conditions and standards for light, *ventilation* and space for occupying a structure.

401.2 Responsibility. The *owner* of the structure shall provide and maintain light, *ventilation* and space conditions in compliance with these requirements. A person shall not occupy as *owner-occupant*, or permit another person to occupy, any *premises* that do not comply with the requirements of this chapter.

401.3 Alternative devices. In lieu of the means for natural light and *ventilation* herein prescribed, artificial light or mechanical *ventilation* complying with the *International Building Code* shall be permitted.

SECTION 402
LIGHT

402.1 Habitable spaces. Every *habitable space* shall have not less than one window of *approved* size facing directly to the outdoors or to a court. The minimum total glazed area for every *habitable space* shall be 8 percent of the floor area of such room. Wherever walls or other portions of a structure face a window of any room and such obstructions are located less than 3 feet (914 mm) from the window and extend to a level above that of the ceiling of the room, such window shall not be deemed to face directly to the outdoors nor to a court and shall not be included as contributing to the required minimum total window area for the room.

> **Exception:** Where natural light for rooms or spaces without exterior glazing areas is provided through an adjoining room, the unobstructed opening to the adjoining room shall be not less than 8 percent of the floor area of the interior room or space, or not less than 25 square feet (2.33 m^2), whichever is greater. The exterior glazing area shall be based on the total floor area being served.

402.2 Common halls and stairways. Every common hall and stairway in residential occupancies, other than in one- and two-family dwellings, shall be lighted at all times with not less than a 60-watt standard incandescent light bulb for each 200 square feet (19 m^2) of floor area or equivalent illumination, provided that the spacing between lights shall not be greater than 30 feet (9144 mm). In other than residential occupancies, interior and exterior means of egress, stairways shall be illuminated at all times the building space served by the means of egress is occupied with not less than 1 footcandle (11 lux) at floors, landings and treads.

402.3 Other spaces. Other spaces shall be provided with natural or artificial light sufficient to permit the maintenance of sanitary conditions, and the safe *occupancy* of the space and utilization of the appliances, equipment and fixtures.

SECTION 403
VENTILATION

403.1 Habitable spaces. Every *habitable space* shall have not less than one openable window. The total openable area of the window in every room shall be equal to not less than 45 percent of the minimum glazed area required in Section 402.1.

> **Exception:** Where rooms and spaces without openings to the outdoors are ventilated through an adjoining room, the unobstructed opening to the adjoining room shall be not less than 8 percent of the floor area of the interior room or space, but not less than 25 square feet (2.33 m^2). The *ventilation* openings to the outdoors shall be based on a total floor area being ventilated.

403.2 Bathrooms and toilet rooms. Every *bathroom* and *toilet room* shall comply with the *ventilation* requirements for *habitable spaces* as required by Section 403.1, except that a window shall not be required in such spaces equipped with a mechanical *ventilation* system. Air exhausted by a mechanical *ventilation* system from a *bathroom* or *toilet room* shall discharge to the outdoors and shall not be recirculated.

403.3 Cooking facilities. Unless *approved* through the certificate of *occupancy*, cooking shall not be permitted in any *rooming unit* or dormitory unit, and a cooking facility or appliance shall not be permitted to be present in the *rooming unit* or dormitory unit.

> **Exceptions:**
>
> 1. Where specifically *approved* in writing by the *code official*.
> 2. Devices such as coffee pots and microwave ovens shall not be considered cooking appliances.

403.4 Process ventilation. Where injurious, toxic, irritating or noxious fumes, gases, dusts or mists are generated, a local exhaust *ventilation* system shall be provided to remove the contaminating agent at the source. Air shall be exhausted to the exterior and not be recirculated to any space.

INTERNATIONAL CODE COUNCIL®
Copyright © 2017 ICC. ALL RIGHTS RESERVED. Accessed by Ashley Stathatos (astathatos@annatexas.gov), (-) Order Number #100879786 on May 06, 2020 08:14 AM (PDT) pursuant to License Agreement with ICC. No further reproduction, no further reproductions by any third party, or distribution authorized. Single user only, copying and networking prohibited. ANY UNAUTHORIZED REPRODUCTION OR DISTRIBUTION IS A VIOLATION OF THE FEDERAL COPYRIGHT ACT AND THE LICENSE AGREEMENT, AND SUBJECT TO CIVIL AND CRIMINAL PENALTIES THEREUNDER.

100879786

403.5 Clothes dryer exhaust. Clothes dryer exhaust systems shall be independent of all other systems and shall be exhausted outside the structure in accordance with the manufacturer's instructions.

Exception: Listed and *labeled* condensing (ductless) clothes dryers.

SECTION 404
OCCUPANCY LIMITATIONS

404.1 Privacy. *Dwelling units*, hotel units, *housekeeping units*, *rooming units* and dormitory units shall be arranged to provide privacy and be separate from other adjoining spaces.

404.2 Minimum room widths. A habitable room, other than a kitchen, shall be not less than 7 feet (2134 mm) in any plan dimension. Kitchens shall have a minimum clear passageway of 3 feet (914 mm) between counterfronts and appliances or counterfronts and walls.

404.3 Minimum ceiling heights. *Habitable spaces*, hallways, corridors, laundry areas, *bathrooms*, *toilet rooms* and habitable *basement* areas shall have a minimum clear ceiling height of 7 feet (2134 mm).

Exceptions:

1. In one- and two-family dwellings, beams or girders spaced not less than 4 feet (1219 mm) on center and projecting not greater than 6 inches (152 mm) below the required ceiling height.
2. *Basement* rooms in one- and two-family dwellings occupied exclusively for laundry, study or recreation purposes, having a minimum ceiling height of 6 feet 8 inches (2033 mm) with a minimum clear height of 6 feet 4 inches (1932 mm) under beams, girders, ducts and similar obstructions.
3. Rooms occupied exclusively for sleeping, study or similar purposes and having a sloped ceiling over all or part of the room, with a minimum clear ceiling height of 7 feet (2134 mm) over not less than one-third of the required minimum floor area. In calculating the floor area of such rooms, only those portions of the floor area with a minimum clear ceiling height of 5 feet (1524 mm) shall be included.

404.4 Bedroom and living room requirements. Every *bedroom* and living room shall comply with the requirements of Sections 404.4.1 through 404.4.5.

404.4.1 Room area. Every living room shall contain not less than 120 square feet (11.2 m^2) and every bedroom shall contain not less than 70 square feet (6.5 m^2) and every bedroom occupied by more than one person shall contain not less than 50 square feet (4.6 m^2) of floor area for each occupant thereof.

404.4.2 Access from bedrooms. *Bedrooms* shall not constitute the only means of access to other *bedrooms* or *habitable spaces* and shall not serve as the only means of egress from other *habitable spaces*.

Exception: Units that contain fewer than two *bedrooms*.

404.4.3 Water closet accessibility. Every *bedroom* shall have access to not less than one water closet and one lavatory without passing through another *bedroom*. Every *bedroom* in a *dwelling unit* shall have access to not less than one water closet and lavatory located in the same story as the *bedroom* or an adjacent story.

404.4.4 Prohibited occupancy. Kitchens and nonhabitable spaces shall not be used for sleeping purposes.

404.4.5 Other requirements. *Bedrooms* shall comply with the applicable provisions of this code including, but not limited to, the light, *ventilation*, room area, ceiling height and room width requirements of this chapter; the plumbing facilities and water-heating facilities requirements of Chapter 5; the heating facilities and electrical receptacle requirements of Chapter 6; and the smoke detector and emergency escape requirements of Chapter 7.

404.5 Overcrowding. Dwelling units shall not be occupied by more occupants than permitted by the minimum area requirements of Table 404.5.

TABLE 404.5
MINIMUM AREA REQUIREMENTS

SPACE	MINIMUM AREA IN SQUARE FEET		
	1-2 occupants	3-5 occupants	6 or more occupants
Living room[a, b]	120	120	150
Dining room[a, b]	No requirement	80	100
Bedrooms	Shall comply with Section 404.4.1		

For SI: 1 square foot = 0.0929 m^2.

a. See Section 404.5.2 for combined living room/dining room spaces.

b. See Section 404.5.1 for limitations on determining the minimum occupancy area for sleeping purposes.

404.5.1 Sleeping area. The minimum occupancy area required by Table 404.5 shall not be included as a sleeping area in determining the minimum occupancy area for sleeping purposes. Sleeping areas shall comply with Section 404.4.

404.5.2 Combined spaces. Combined living room and dining room spaces shall comply with the requirements of Table 404.5 if the total area is equal to that required for separate rooms and if the space is located so as to function as a combination living room/dining room.

404.6 Efficiency unit. Nothing in this section shall prohibit an efficiency living unit from meeting the following requirements:

1. A unit occupied by not more than one occupant shall have a minimum clear floor area of 120 square feet (11.2 m^2). A unit occupied by not more than two *occupants* shall have a minimum clear floor area of 220 square feet (20.4 m^2). A unit occupied by three *occupants* shall have a minimum clear floor area of 320 square feet (29.7 m^2). These required areas shall be exclusive of the areas required by Items 2 and 3.
2. The unit shall be provided with a kitchen sink, cooking appliance and refrigeration facilities, each having a minimum clear working space of 30 inches (762 mm)

INTERNATIONAL CODE COUNCIL®

Copyright © 2017 ICC. ALL RIGHTS RESERVED. Accessed by Ashley Stathatos (astathatos@annatexas.gov), (-) Order Number #100879786 on May 06, 2020 08:14 AM (PDT) pursuant to License Agreement with ICC. No further reproduction, no further reproductions by any third party, or distribution authorized. Single user only, copying and networking prohibited. ANY UNAUTHORIZED REPRODUCTION OR DISTRIBUTION IS A VIOLATION OF THE FEDERAL COPYRIGHT ACT AND THE LICENSE AGREEMENT, AND SUBJECT TO CIVIL AND CRIMINAL PENALTIES THEREUNDER.

100879786

in front. Light and *ventilation* conforming to this code shall be provided.

3. The unit shall be provided with a separate *bathroom* containing a water closet, lavatory and bathtub or shower.
4. The maximum number of *occupants* shall be three.

404.7 Food preparation. Spaces to be occupied for food preparation purposes shall contain suitable space and equipment to store, prepare and serve foods in a sanitary manner. There shall be adequate facilities and services for the sanitary disposal of food wastes and refuse, including facilities for temporary storage.

PUBLICATION

INTERNATIONAL CODE COUNCIL®

Copyright © 2017 ICC. ALL RIGHTS RESERVED. Accessed by Ashley Stathatos (astathatos@annatexas.gov), (-) Order Number #100879786 on May 06, 2020 08:14 AM (PDT) pursuant to License Agreement with ICC. No further reproduction, no further reproductions by any third party, or distribution authorized. Single user only, copying and networking prohibited. ANY UNAUTHORIZED REPRODUCTION OR DISTRIBUTION IS A VIOLATION OF THE FEDERAL COPYRIGHT ACT AND THE LICENSE AGREEMENT, AND SUBJECT TO CIVIL AND CRIMINAL PENALTIES THEREUNDER.

100879786

DUPLICATE

Copyright © 2017 ICC. ALL RIGHTS RESERVED. Accessed by Ashley Stathatos (astathatos@annatexas.gov), (-) Order Number #100879786 on May 05, 2020 08:14 AM (PDT) pursuant to License Agreement with ICC. No further reproduction, no further reproductions by any third party, or distribution authorized. Single user only, copying and networking prohibited. ANY UNAUTHORIZED REPRODUCTION OR DISTRIBUTION IS A VIOLATION OF THE FEDERAL COPYRIGHT ACT AND THE LICENSE AGREEMENT, AND SUBJECT TO CIVIL AND CRIMINAL PENALTIES THEREUNDER.

CHAPTER 5

PLUMBING FACILITIES AND FIXTURE REQUIREMENTS

User note:

About this chapter: *Chapter 5 establishes minimum sanitary and clean conditions in occupied buildings by containing requirements for the installation, maintenance and location of plumbing systems and facilities, including the water supply system, water heating appliances, sewage disposal systems and related plumbing fixtures. Chapter 5 includes requirements for providing potable water to a building and the basic fixtures to effectively utilize and dispose of that water.*

SECTION 501
GENERAL

501.1 Scope. The provisions of this chapter shall govern the minimum plumbing systems, facilities and plumbing fixtures to be provided.

501.2 Responsibility. The *owner* of the structure shall provide and maintain such plumbing facilities and plumbing fixtures in compliance with these requirements. A person shall not occupy as *owner-occupant* or permit another person to occupy any structure or *premises* that does not comply with the requirements of this chapter.

SECTION 502
REQUIRED FACILITIES

[P] 502.1 Dwelling units. Every *dwelling unit* shall contain its own bathtub or shower, lavatory, water closet and kitchen sink that shall be maintained in a sanitary, safe working condition. The lavatory shall be placed in the same room as the water closet or located in close proximity to the door leading directly into the room in which such water closet is located. A kitchen sink shall not be used as a substitute for the required lavatory.

[P] 502.2 Rooming houses. Not less than one water closet, lavatory and bathtub or shower shall be supplied for each four *rooming units*.

[P] 502.3 Hotels. Where private water closets, lavatories and baths are not provided, one water closet, one lavatory and one bathtub or shower having access from a public hallway shall be provided for each 10 *occupants*.

[P] 502.4 Employees' facilities. Not less than one water closet, one lavatory and one drinking facility shall be available to employees.

> **[P] 502.4.1 Drinking facilities.** Drinking facilities shall be a drinking fountain, water cooler, bottled water cooler or disposable cups next to a sink or water dispenser. Drinking facilities shall not be located in *toilet rooms* or *bathrooms*.

[P] 502.5 Public toilet facilities. Public toilet facilities shall be maintained in a safe, sanitary and working condition in accordance with the *International Plumbing Code*. Except for periodic maintenance or cleaning, public access and use shall be provided to the toilet facilities at all times during *occupancy* of the *premises*.

SECTION 503
TOILET ROOMS

[P] 503.1 Privacy. *Toilet rooms* and *bathrooms* shall provide privacy and shall not constitute the only passageway to a hall or other space, or to the exterior. A door and interior locking device shall be provided for all common or shared *bathrooms* and *toilet rooms* in a multiple dwelling.

[P] 503.2 Location. *Toilet rooms* and *bathrooms* serving hotel units, *rooming units* or dormitory units or *housekeeping units*, shall have access by traversing not more than one flight of stairs and shall have access from a common hall or passageway.

[P] 503.3 Location of employee toilet facilities. Toilet facilities shall have access from within the employees' working area. The required toilet facilities shall be located not more than one story above or below the employees' working area and the path of travel to such facilities shall not exceed a distance of 500 feet (152 m). Employee facilities shall either be separate facilities or combined employee and public facilities.

> **Exception:** Facilities that are required for employees in storage structures or kiosks, which are located in adjacent structures under the same ownership, lease or control, shall not exceed a travel distance of 500 feet (152 m) from the employees' regular working area to the facilities.

[P] 503.4 Floor surface. In other than *dwelling units*, every *toilet room* floor shall be maintained to be a smooth, hard, nonabsorbent surface to permit such floor to be easily kept in a clean and sanitary condition.

SECTION 504
PLUMBING SYSTEMS AND FIXTURES

[P] 504.1 General. Plumbing fixtures shall be properly installed and maintained in working order, and shall be kept free from obstructions, leaks and defects and be capable of performing the function for which such plumbing fixtures are designed. Plumbing fixtures shall be maintained in a safe, sanitary and functional condition.

[P] 504.2 Fixture clearances. Plumbing fixtures shall have adequate clearances for usage and cleaning.

DRAFT

INTERNATIONAL CODE COUNCIL®

Copyright © 2017 ICC. ALL RIGHTS RESERVED. Accessed by Ashley Stathatos (astathatos@annatexas.gov), (-) Order Number #100879786 on May 06, 2020 08:14 AM (PDT) pursuant to License Agreement with ICC. No further reproduction, no further reproductions by any third party, or distribution authorized. Single user only, copying and networking prohibited. ANY UNAUTHORIZED REPRODUCTION OR DISTRIBUTION IS A VIOLATION OF THE FEDERAL COPYRIGHT ACT AND THE LICENSE AGREEMENT, AND SUBJECT TO CIVIL AND CRIMINAL PENALTIES THEREUNDER.

100879786

[P] 504.3 Plumbing system hazards. Where it is found that a plumbing system in a structure constitutes a hazard to the *occupants* or the structure by reason of inadequate service, inadequate venting, cross connection, backsiphonage, improper installation, *deterioration* or damage or for similar reasons, the *code official* shall require the defects to be corrected to eliminate the hazard.

SECTION 505
WATER SYSTEM

[P] 505.1 General. Every sink, lavatory, bathtub or shower, drinking fountain, water closet or other plumbing fixture shall be properly connected to either a public water system or to an *approved* private water system. Kitchen sinks, lavatories, laundry facilities, bathtubs and showers shall be supplied with hot or tempered and cold running water in accordance with the *International Plumbing Code.*

[P] 505.2 Contamination. The water supply shall be maintained free from contamination, and all water inlets for plumbing fixtures shall be located above the flood-level rim of the fixture. Shampoo basin faucets, janitor sink faucets and other hose bibs or faucets to which hoses are attached and left in place, shall be protected by an approved atmospheric-type vacuum breaker or an approved permanently attached hose connection vacuum breaker.

[P] 505.3 Supply. The water supply system shall be installed and maintained to provide a supply of water to plumbing fixtures, devices and appurtenances in sufficient volume and at pressures adequate to enable the fixtures to function properly, safely, and free from defects and leaks.

[P] 505.4 Water heating facilities. Water heating facilities shall be properly installed, maintained and capable of providing an adequate amount of water to be drawn at every required sink, lavatory, bathtub, shower and laundry facility at a temperature not less than 110°F (43°C). A gas-burning water heater shall not be located in any *bathroom, toilet room, bedroom* or other occupied room normally kept closed, unless adequate combustion air is provided. An *approved* combination temperature and pressure-relief valve and relief valve discharge pipe shall be properly installed and maintained on water heaters.

[P] 505.5 Nonpotable water reuse systems. Nonpotable water reuse systems and rainwater collection and conveyance systems shall be maintained in a safe and sanitary condition. Where such systems are not properly maintained, the systems shall be repaired to provide for safe and sanitary conditions, or the system shall be abandoned in accordance with Section 505.5.1.

[P] 505.5.1 Abandonment of systems. Where a nonpotable water reuse system or a rainwater collection and distribution system is not maintained or the owner ceases use of the system, the system shall be abandoned in accordance with Section 1301.10 of the *International Plumbing Code.*

SECTION 506
SANITARY DRAINAGE SYSTEM

[P] 506.1 General. Plumbing fixtures shall be properly connected to either a public sewer system or to an *approved* private sewage disposal system.

[P] 506.2 Maintenance. Every plumbing stack, vent, waste and sewer line shall function properly and be kept free from obstructions, leaks and defects.

[P] 506.3 Grease interceptors. Grease interceptors and automatic grease removal devices shall be maintained in accordance with this code and the manufacturer's installation instructions. Grease interceptors and automatic grease removal devices shall be regularly serviced and cleaned to prevent the discharge of oil, grease, and other substances harmful or hazardous to the building drainage system, the public sewer, the private sewage disposal system or the sewage treatment plant or processes. Records of maintenance, cleaning and repairs shall be available for inspection by the *code official.*

SECTION 507
STORM DRAINAGE

[P] 507.1 General. Drainage of roofs and paved areas, *yards* and courts, and other open areas on the *premises* shall not be discharged in a manner that creates a public nuisance.

DRAFT

Copyright © 2017 ICC. ALL RIGHTS RESERVED. Accessed by Ashley Stathatos (astathatos@annatexas.gov), (-) Order Number #100879786 on May 06, 2020 08:14 AM (PDT) pursuant to License Agreement with ICC. No further reproduction, no further reproductions by any third party, or distribution authorized. Single user only, copying and networking prohibited. ANY UNAUTHORIZED REPRODUCTION OR DISTRIBUTION IS A VIOLATION OF THE FEDERAL COPYRIGHT ACT AND THE LICENSE AGREEMENT, AND SUBJECT TO CIVIL AND CRIMINAL PENALTIES THEREUNDER.

CHAPTER 6

MECHANICAL AND ELECTRICAL REQUIREMENTS

User note:

About this chapter: *Chapter 6 establishes minimum performance requirements for heating, electrical and mechanical facilities serving existing structures, such as heating and air-conditioning equipment, appliances and their supporting systems; water heating equipment, appliances and systems; cooking equipment and appliances; ventilation and exhaust equipment; gas and liquid fuel distribution piping and components; fireplaces and solid fuel-burning appliances; chimneys and vents; electrical services; lighting fixtures; electrical receptacle outlets; electrical distribution system equipment, devices and wiring; and elevators, escalators and dumbwaiters.*

SECTION 601
GENERAL

601.1 Scope. The provisions of this chapter shall govern the minimum mechanical and electrical facilities and equipment to be provided.

601.2 Responsibility. The *owner* of the structure shall provide and maintain mechanical and electrical facilities and equipment in compliance with these requirements. A person shall not occupy as *owner-occupant* or permit another person to occupy any *premises* that does not comply with the requirements of this chapter.

SECTION 602
HEATING FACILITIES

602.1 Facilities required. Heating facilities shall be provided in structures as required by this section.

602.2 Residential occupancies. Dwellings shall be provided with heating facilities capable of maintaining a room temperature of 68°F (20°C) in all habitable rooms, *bathrooms* and *toilet rooms* based on the winter outdoor design temperature for the locality indicated in Appendix D of the *International Plumbing Code*. Cooking appliances shall not be used, nor shall portable unvented fuel-burning space heaters be used, as a means to provide required heating.

Exception: In areas where the average monthly temperature is above 30°F (-1°C), a minimum temperature of 65°F (18°C) shall be maintained.

602.3 Heat supply. Every *owner* and *operator* of any building who rents, leases or lets one or more *dwelling units* or *sleeping units* on terms, either expressed or implied, to furnish heat to the *occupants* thereof shall supply heat during the period from **[DATE]** to **[DATE]** to maintain a minimum temperature of 68°F (20°C) in all habitable rooms, *bathrooms* and *toilet rooms*.

Exceptions:

1. When the outdoor temperature is below the winter outdoor design temperature for the locality, maintenance of the minimum room temperature shall not be required provided that the heating system is operating at its full design capacity. The winter outdoor design temperature for the locality shall be as indicated in Appendix D of the *International Plumbing Code*.
2. In areas where the average monthly temperature is above 30°F (-1°C), a minimum temperature of 65°F (18°C) shall be maintained.

602.4 Occupiable work spaces. Indoor occupiable work spaces shall be supplied with heat during the period from **[DATE]** to **[DATE]** to maintain a minimum temperature of 65°F (18°C) during the period the spaces are occupied.

Exceptions:

1. Processing, storage and operation areas that require cooling or special temperature conditions.
2. Areas in which persons are primarily engaged in vigorous physical activities.

602.5 Room temperature measurement. The required room temperatures shall be measured 3 feet (914 mm) above the floor near the center of the room and 2 feet (610 mm) inward from the center of each exterior wall.

SECTION 603
MECHANICAL EQUIPMENT

603.1 Mechanical equipment and appliances. Mechanical equipment, appliances, fireplaces, solid fuel-burning appliances, cooking appliances and water heating appliances shall be properly installed and maintained in a safe working condition, and shall be capable of performing the intended function.

603.2 Removal of combustion products. Fuel-burning equipment and appliances shall be connected to an *approved* chimney or vent.

Exception: Fuel-burning equipment and appliances that are *labeled* for unvented operation.

603.3 Clearances. Required clearances to combustible materials shall be maintained.

603.4 Safety controls. Safety controls for fuel-burning equipment shall be maintained in effective operation.

603.5 Combustion air. A supply of air for complete combustion of the fuel and for *ventilation* of the space containing the

DRAFT

INTERNATIONAL CODE COUNCIL®
Copyright © 2017 ICC. ALL RIGHTS RESERVED. Accessed by Ashley Stathatos (astathatos@annatexas.gov), (-) Order Number #100879786 on May 06, 2020 08:14 AM (PDT) pursuant to License Agreement with ICC. No further reproduction, no further reproductions by any third party, or distribution authorized. Single user only, copying and networking prohibited. ANY UNAUTHORIZED REPRODUCTION OR DISTRIBUTION IS A VIOLATION OF THE FEDERAL COPYRIGHT ACT AND THE LICENSE AGREEMENT, AND SUBJECT TO CIVIL AND CRIMINAL PENALTIES THEREUNDER.

100879786

fuel-burning equipment shall be provided for the fuel-burning equipment.

603.6 Energy conservation devices. Devices intended to reduce fuel consumption by attachment to a fuel-burning appliance, to the fuel supply line thereto, or to the vent outlet or vent piping therefrom, shall not be installed unless *labeled* for such purpose and the installation is specifically *approved*.

SECTION 604
ELECTRICAL FACILITIES

604.1 Facilities required. Every occupied building shall be provided with an electrical system in compliance with the requirements of this section and Section 605.

604.2 Service. The size and usage of appliances and equipment shall serve as a basis for determining the need for additional facilities in accordance with NFPA 70. *Dwelling units* shall be served by a three-wire, 120/240 volt, single-phase electrical service having a minimum rating of 60 amperes.

604.3 Electrical system hazards. Where it is found that the electrical system in a structure constitutes a hazard to the *occupants* or the structure by reason of inadequate service, improper fusing, insufficient receptacle and lighting outlets, improper wiring or installation, *deterioration* or damage, or for similar reasons, the *code official* shall require the defects to be corrected to eliminate the hazard.

604.3.1 Abatement of electrical hazards associated with water exposure. The provisions of this section shall govern the repair and replacement of electrical systems and equipment that have been exposed to water.

604.3.1.1 Electrical equipment. Electrical distribution equipment, motor circuits, power equipment, transformers, wire, cable, flexible cords, wiring devices, ground fault circuit interrupters, surge protectors, molded case circuit breakers, low-voltage fuses, luminaires, ballasts, motors and electronic control, signaling and communication equipment that have been exposed to water shall be replaced in accordance with the provisions of the *International Building Code*.

Exception: The following equipment shall be allowed to be repaired where an inspection report from the equipment manufacturer or *approved* manufacturer's representative indicates that the equipment has not sustained damage that requires replacement:

1. Enclosed switches, rated not more than 600 volts or less.
2. Busway, rated not more than 600 volts.
3. Panelboards, rated not more than 600 volts.
4. Switchboards, rated not more than 600 volts.
5. Fire pump controllers, rated not more than 600 volts.
6. Manual and magnetic motor controllers.
7. Motor control centers.
8. Alternating current high-voltage circuit breakers.
9. Low-voltage power circuit breakers.
10. Protective relays, meters and current transformers.
11. Low- and medium-voltage switchgear.
12. Liquid-filled transformers.
13. Cast-resin transformers.
14. Wire or cable that is suitable for wet locations and whose ends have not been exposed to water.
15. Wire or cable, not containing fillers, that is suitable for wet locations and whose ends have not been exposed to water.
16. Luminaires that are listed as submersible.
17. Motors.
18. Electronic control, signaling and communication equipment.

604.3.2 Abatement of electrical hazards associated with fire exposure. The provisions of this section shall govern the repair and replacement of electrical systems and equipment that have been exposed to fire.

604.3.2.1 Electrical equipment. Electrical switches, receptacles and fixtures, including furnace, water heating, security system and power distribution circuits, that have been exposed to fire, shall be replaced in accordance with the provisions of the *International Building Code*.

Exception: Electrical switches, receptacles and fixtures that shall be allowed to be repaired where an inspection report from the equipment manufacturer or *approved* manufacturer's representative indicates that the equipment has not sustained damage that requires replacement.

SECTION 605
ELECTRICAL EQUIPMENT

605.1 Installation. Electrical equipment, wiring and appliances shall be properly installed and maintained in a safe and *approved* manner.

605.2 Receptacles. Every *habitable space* in a dwelling shall contain not less than two separate and remote receptacle outlets. Every laundry area shall contain not less than one grounding-type receptacle or a receptacle with a ground fault circuit interrupter. Every *bathroom* shall contain not less than one receptacle. Any new *bathroom* receptacle outlet shall have ground fault circuit interrupter protection. All receptacle outlets shall have the appropriate faceplate cover for the location.

605.3 Luminaires. Every public hall, interior stairway, *toilet room*, kitchen, *bathroom*, laundry room, boiler room and furnace room shall contain not less than one electric luminaire.

INTERNATIONAL CODE COUNCIL®

Copyright © 2017 ICC. ALL RIGHTS RESERVED. Accessed by Ashley Stathatos (astathatos@annatexas.gov), (-) Order Number #100879786 on May 06, 2020 08:14 AM (PDT) pursuant to License Agreement with ICC. No further reproduction, no further reproductions by any third party, or distribution authorized. Single user only, copying and networking prohibited. ANY UNAUTHORIZED REPRODUCTION OR DISTRIBUTION IS A VIOLATION OF THE FEDERAL COPYRIGHT ACT AND THE LICENSE AGREEMENT, AND SUBJECT TO CIVIL AND CRIMINAL PENALTIES THEREUNDER.

100879786

Pool and spa luminaires over 15 V shall have ground fault circuit interrupter protection.

605.4 Wiring. Flexible cords shall not be used for permanent wiring, or for running through doors, windows, or cabinets, or concealed within walls, floors, or ceilings.

SECTION 606
ELEVATORS, ESCALATORS AND DUMBWAITERS

606.1 General. Elevators, dumbwaiters and escalators shall be maintained in compliance with ASME A17.1. The most current certificate of inspection shall be on display at all times within the elevator or attached to the escalator or dumbwaiter, be available for public inspection in the office of the building *operator* or be posted in a publicly conspicuous location *approved* by the *code official*. The inspection and tests shall be performed at not less than the periodic intervals listed in ASME A17.1, Appendix N, except where otherwise specified by the authority having jurisdiction.

606.2 Elevators. In buildings equipped with passenger elevators, not less than one elevator shall be maintained in operation at all times when the building is occupied.

> **Exception:** Buildings equipped with only one elevator shall be permitted to have the elevator temporarily out of service for testing or servicing.

SECTION 607
DUCT SYSTEMS

607.1 General. Duct systems shall be maintained free of obstructions and shall be capable of performing the required function.

PUBLICATE

INTERNATIONAL CODE COUNCIL®

Copyright © 2017 ICC. ALL RIGHTS RESERVED. Accessed by Ashley Stathatos (astathatos@annatexas.gov), (-) Order Number #100879786 on May 06, 2020 08:14 AM (PDT) pursuant to License Agreement with ICC. No further reproduction, no further reproductions by any third party, or distribution authorized. Single user only, copying and networking prohibited. ANY UNAUTHORIZED REPRODUCTION OR DISTRIBUTION IS A VIOLATION OF THE FEDERAL COPYRIGHT ACT AND THE LICENSE AGREEMENT, AND SUBJECT TO CIVIL AND CRIMINAL PENALTIES THEREUNDER.

DUPLICATE

Copyright © 2017 ICC. ALL RIGHTS RESERVED. Accessed by Ashley Stathatos (astathatos@annatexas.gov), (-) Order Number #100879786 on May 06, 2020 08:14 AM (PDT) pursuant to License Agreement with ICC. No further reproduction, no further reproductions by any third party, or distribution authorized. Single user only, copying and networking prohibited. ANY UNAUTHORIZED REPRODUCTION OR DISTRIBUTION IS A VIOLATION OF THE FEDERAL COPYRIGHT ACT AND THE LICENSE AGREEMENT, AND SUBJECT TO CIVIL AND CRIMINAL PENALTIES THEREUNDER.

CHAPTER 7

FIRE SAFETY REQUIREMENTS

User note:

About this chapter: *Chapter 7 establishes fire safety requirements for existing structures by containing requirements for means of egress, including path of travel, required egress width, means of egress doors and emergency escape openings, and for the maintenance of fire-resistance-rated assemblies, fire protection systems, and carbon monoxide alarm and detection systems.*

SECTION 701
GENERAL

701.1 Scope. The provisions of this chapter shall govern the minimum conditions and standards for fire safety relating to structures and exterior *premises*, including fire safety facilities and equipment to be provided.

701.2 Responsibility. The *owner* of the *premises* shall provide and maintain such fire safety facilities and equipment in compliance with these requirements. A person shall not occupy as *owner-occupant* or permit another person to occupy any *premises* that do not comply with the requirements of this chapter.

SECTION 702
MEANS OF EGRESS

[F] 702.1 General. A safe, continuous and unobstructed path of travel shall be provided from any point in a building or structure to the *public way*. Means of egress shall comply with the *International Fire Code*.

[F] 702.2 Aisles. The required width of aisles in accordance with the *International Fire Code* shall be unobstructed.

[F] 702.3 Locked doors. Means of egress doors shall be readily openable from the side from which egress is to be made without the need for keys, special knowledge or effort, except where the door hardware conforms to that permitted by the *International Building Code*.

[F] 702.4 Emergency escape openings. Required emergency escape openings shall be maintained in accordance with the code in effect at the time of construction, and the following. Required emergency escape and rescue openings shall be operational from the inside of the room without the use of keys or tools. Bars, grilles, grates or similar devices are permitted to be placed over emergency escape and rescue openings provided that the minimum net clear opening size complies with the code that was in effect at the time of construction and such devices shall be releasable or removable from the inside without the use of a key, tool or force greater than that which is required for normal operation of the escape and rescue opening.

SECTION 703
FIRE-RESISTANCE RATINGS

[F] 703.1 Fire-resistance-rated assemblies. The provisions of this chapter shall govern maintenance of the materials, systems and assemblies used for structural fire resistance and fire-resistance-rated construction separation of adjacent spaces to safeguard against the spread of fire and smoke within a building and the spread of fire to or from buildings.

[F] 703.2 Unsafe conditions. Where any components are not maintained and do not function as intended or do not have the fire resistance required by the code under which the building was constructed or altered, such components or portions thereof shall be deemed unsafe conditions in accordance with Section 111.1.1 of the *International Fire Code*. Components or portions thereof determined to be unsafe shall be repaired or replaced to conform to that code under which the building was constructed or altered. Where the condition of components is such that any building, structure or portion thereof presents an imminent danger to the occupants of the building, structure or portion thereof, the fire code official shall act in accordance with Section 111.2 of the *International Fire Code*.

[F] 703.3 Maintenance. The required fire-resistance rating of fire-resistance-rated construction, including walls, firestops, shaft enclosures, partitions, smoke barriers, floors, fire-resistive coatings and sprayed fire-resistant materials applied to structural members and joint systems, shall be maintained. Such elements shall be visually inspected annually by the owner and repaired, restored or replaced where damaged, altered, breached or penetrated. Records of inspections and repairs shall be maintained. Where concealed, such elements shall not be required to be visually inspected by the owner unless the concealed space is accessible by the removal or movement of a panel, access door, ceiling tile or entry to the space. Openings made therein for the passage of pipes, electrical conduit, wires, ducts, air transfer and any other reason shall be protected with approved methods capable of resisting the passage of smoke and fire. Openings through fire-resistance-rated assemblies shall be protected by self- or automatic-closing doors of approved construction meeting the fire protection requirements for the assembly.

INTERNATIONAL CODE COUNCIL®
Copyright © 2017 ICC. ALL RIGHTS RESERVED. Accessed by Ashley Stathatos (astathatos@annatexas.gov), (-) Order Number #100879786 on May 06, 2020 08:14 AM (PDT) pursuant to License Agreement with ICC. No further reproduction, no further reproductions by any third party, or distribution authorized. Single user only, copying and networking prohibited. ANY UNAUTHORIZED REPRODUCTION OR DISTRIBUTION IS A VIOLATION OF THE FEDERAL COPYRIGHT ACT AND THE LICENSE AGREEMENT, AND SUBJECT TO CIVIL AND CRIMINAL PENALTIES THEREUNDER.

100879786

[F] 703.3.1 Fire blocking and draft stopping. Required fire blocking and draft stopping in combustible concealed spaces shall be maintained to provide continuity and integrity of the construction.

[F] 703.3.2 Smoke barriers and smoke partitions. Required smoke barriers and smoke partitions shall be maintained to prevent the passage of smoke. Openings protected with approved smoke barrier doors or smoke dampers shall be maintained in accordance with NFPA 105.

[F] 703.3.3 Fire walls, fire barriers, and fire partitions. Required fire walls, fire barriers and fire partitions shall be maintained to prevent the passage of fire. Openings protected with approved doors or fire dampers shall be maintained in accordance with NFPA 80.

[F] 703.4 Opening protectives. Opening protectives shall be maintained in an operative condition in accordance with NFPA 80. The application of field-applied labels associated with the maintenance of opening protectives shall follow the requirements of the approved third-party certification organization accredited for listing the opening protective. Fire doors and smoke barrier doors shall not be blocked or obstructed, or otherwise made inoperable. Fusible links shall be replaced whenever fused or damaged. Fire door assemblies shall not be modified.

[F] 703.4.1 Signs. Where required by the code official, a sign shall be permanently displayed on or near each fire door in letters not less than 1 inch (25 mm) high to read as follows:

1. For doors designed to be kept normally open: FIRE DOOR – DO NOT BLOCK.
2. For doors designed to be kept normally closed: FIRE DOOR – KEEP CLOSED.

[F] 703.4.2 Hold-open devices and closers. Hold-open devices and automatic door closers shall be maintained. During the period that such a device is out of service for repairs, the door it operates shall remain in the closed position.

[F] 703.4.3 Door operation. Swinging fire doors shall close from the full-open position and latch automatically. The door closer shall exert enough force to close and latch the door from any partially open position.

[F] 703.5 Ceilings. The hanging and displaying of salable goods and other decorative materials from acoustical ceiling systems that are part of a fire-resistance-rated horizontal assembly shall be prohibited.

[F] 703.6 Testing. Horizontal and vertical sliding and rolling fire doors shall be inspected and tested annually to confirm operation and full closure. Records of inspections and testing shall be maintained.

[F] 703.7 Vertical shafts. Interior vertical shafts, including stairways, elevator hoistways and service and utility shafts, which connect two or more stories of a building shall be enclosed or protected as required in Chapter 11 of the *International Fire Code*. New floor openings in existing buildings shall comply with the *International Building Code*.

[F] 703.8 Opening protective closers..Where openings are required to be protected, opening protectives shall be maintained self-closing or automatic-closing by smoke detection. Existing fusible-link-type automatic door-closing devices shall be replaced if the fusible link rating exceeds 135°F (57°C).

SECTION 704
FIRE PROTECTION SYSTEMS

[F] 704.1 Inspection, testing and maintenance. Fire detection, alarm and extinguishing systems, mechanical smoke exhaust systems, and smoke and heat vents shall be maintained in accordance with the *International Fire Code* in an operative condition at all times, and shall be replaced or repaired where defective.

[F] 704.1.1 Installation. Fire protection systems shall be maintained in accordance with the original installation standards for that system. Required systems shall be extended, altered or augmented as necessary to maintain and continue protection where the building is altered or enlarged. Alterations to fire protection systems shall be done in accordance with applicable standards.

[F] 704.1.2 Required fire protection systems. Fire protection systems required by this code, the *International Fire Code* or the *International Building Code* shall be installed, repaired, operated, tested and maintained in accordance with this code. A fire protection system for which a design option, exception or reduction to the provisions of this code, the *International Fire Code* or the *International Building Code* has been granted shall be considered to be a required system.

[F] 704.1.3 Fire protection systems. Fire protection systems shall be inspected, maintained and tested in accordance with the following *International Fire Code* requirements.

1. Automatic sprinkler systems, see Section 903.5.
2. Automatic fire-extinguishing systems protecting commercial cooking systems, see Section 904.12.5.
3. Automatic water mist extinguishing systems, see Section 904.11.
4. Carbon dioxide extinguishing systems, see Section 904.8.
5. Carbon monoxide alarms and carbon monoxide detection systems, see Section 915.6.
6. Clean-agent extinguishing systems, see Section 904.10.
7. Dry-chemical extinguishing systems, see Section 904.6.
8. Fire alarm and fire detection systems, see Section 907.8.
9. Fire department connections, see Sections 912.4 and 912.7.
10. Fire pumps, see Section 913.5.
11. Foam extinguishing systems, see Section 904.7.
12. Halon extinguishing systems, see Section 904.9.

INTERNATIONAL CODE COUNCIL®

Copyright © 2017 ICC. ALL RIGHTS RESERVED. Accessed by Ashley Stathatos (astathatos@annatexas.gov), (-) Order Number #100879786 on May 06, 2020 08:14 AM (PDT) pursuant to License Agreement with ICC. No further reproduction, no further reproductions by any third party, or distribution authorized. Single user only, copying and networking prohibited. ANY UNAUTHORIZED REPRODUCTION OR DISTRIBUTION IS A VIOLATION OF THE FEDERAL COPYRIGHT ACT AND THE LICENSE AGREEMENT, AND SUBJECT TO CIVIL AND CRIMINAL PENALTIES THEREUNDER.

100879786

13. Single- and multiple-station smoke alarms, see Section 907.10.
14. Smoke and heat vents and mechanical smoke removal systems, see Section 910.5.
15. Smoke control systems, see Section 909.20.
16. Wet-chemical extinguishing systems, see Section 904.5.

[F] 704.2 Standards. Fire protection systems shall be inspected, tested and maintained in accordance with the referenced standards listed in Table 704.2 and as required in this section.

TABLE 704.2
FIRE PROTECTION SYSTEM MAINTENANCE STANDARDS

SYSTEM	STANDARD
Portable fire extinguishers	NFPA 10
Carbon dioxide fire-extinguishing system	NFPA 12
Halon 1301 fire-extinguishing systems	NFPA 12A
Dry-chemical extinguishing systems	NFPA 17
Wet-chemical extinguishing systems	NFPA 17A
Water-based fire protection systems	NFPA 25
Fire alarm systems	NFPA 72
Smoke and heat vents	NFPA 204
Water-mist systems	NFPA 750
Clean-agent extinguishing systems	NFPA 2001

[F] 704.2.1 Records. Records shall be maintained of all system inspections, tests and maintenance required by the referenced standards.

[F] 704.2.2 Records information. Initial records shall include the: name of the installation contractor; type of components installed; manufacturer of the components; location and number of components installed per floor; and manufacturers' operation and maintenance instruction manuals. Such records shall be maintained for the life of the installation.

[F] 704.3 Systems out of service. Where a required fire protection system is out of service, the fire department and the fire code official shall be notified immediately and, where required by the fire code official, either the building shall be evacuated or an approved fire watch shall be provided for all occupants left unprotected by the shutdown until the fire protection system has been returned to service. Where utilized, fire watches shall be provided with not less than one approved means for notification of the fire department and shall not have duties beyond performing constant patrols of the protected premises and keeping watch for fires. Actions shall be taken in accordance with Section 901 of the *International Fire Code* to bring the systems back in service.

[F] 704.3.1 Emergency impairments. Where unplanned impairments of fire protection systems occur, appropriate emergency action shall be taken to minimize potential injury and damage. The impairment coordinator shall implement the steps outlined in Section 901.7.4 of the *International Fire Code*.

[F] 704.4 Removal of or tampering with equipment. It shall be unlawful for any person to remove, tamper with or otherwise disturb any fire hydrant, fire detection and alarm system, fire suppression system or other fire appliance required by this code except for the purposes of extinguishing fire, training, recharging or making necessary repairs.

[F] 704.4.1 Removal of or tampering with appurtenances. Locks, gates, doors, barricades, chains, enclosures, signs, tags and seals that have been installed by or at the direction of the fire code official shall not be removed, unlocked, destroyed or tampered with in any manner.

[F] 704.4.2 Removal of existing occupant-use hose lines. The fire code official is authorized to permit the removal of existing occupant-use hose lines where all of the following apply:

1. The installation is not required by the *International Fire Code* or the *International Building Code*.
2. The hose line would not be utilized by trained personnel or the fire department.
3. The remaining outlets are compatible with local fire department fittings.

[F] 704.4.3 Termination of monitoring service. For fire alarm systems required to be monitored by the *International Fire Code*, notice shall be made to the fire code official whenever alarm monitoring services are terminated. Notice shall be made in writing by the provider of the monitoring service being terminated.

[F] 704.5 Fire department connection. Where the fire department connection is not visible to approaching fire apparatus, the fire department connection shall be indicated by an *approved* sign mounted on the street front or on the side of the building. Such sign shall have the letters "FDC" not less than 6 inches (152 mm) high and words in letters not less than 2 inches (51 mm) high or an arrow to indicate the location. Such signs shall be subject to the approval of the fire code official.

[F] 704.5.1 Fire department connection access. Ready access to fire department connections shall be maintained at all times and without obstruction by fences, bushes, trees, walls or any other fixed or movable object. Access to fire department connections shall be approved by the fire chief.

Exception: Fences, where provided with an access gate equipped with a sign complying with the legend requirements of Section 912.5 of the *International Fire Code* and a means of emergency operation. The gate and the means of emergency operation shall be approved by the fire chief and maintained operational at all times.

[F] 704.5.2 Clear space around connections. A working space of not less than 36 inches (914 mm) in width, 36 inches (914 mm) in depth and 78 inches (1981 mm) in height shall be provided and maintained in front of and to the sides of wall-mounted fire department connections and around the circumference of free-standing fire department connections.

DRAFT

INTERNATIONAL CODE COUNCIL®
Copyright © 2017 ICC. ALL RIGHTS RESERVED. Accessed by Ashley Stathatos (astathatos@annatexas.gov), (-) Order Number #100879786 on May 06, 2020 08:14 AM (PDT) pursuant to License Agreement with ICC. No further reproduction, no further reproductions by any third party, or distribution authorized. Single user only, copying and networking prohibited. ANY UNAUTHORIZED REPRODUCTION OR DISTRIBUTION IS A VIOLATION OF THE FEDERAL COPYRIGHT ACT AND THE LICENSE AGREEMENT, AND SUBJECT TO CIVIL AND CRIMINAL PENALTIES THEREUNDER.

100879786

[F] 704.6 Single- and multiple-station smoke alarms. Single- and multiple-station smoke alarms shall be installed in existing Group I-1 and R occupancies in accordance with Sections 704.6.1 through 704.6.3.

[F] 704.6.1 Where required. Existing Group I-1 and R occupancies shall be provided with single-station smoke alarms in accordance with Sections 704.6.1.1 through 704.6.1.4. Interconnection and power sources shall be in accordance with Sections 704.6.2 and 704.6.3.

Exceptions:

1. Where the code that was in effect at the time of construction required smoke alarms and smoke alarms complying with those requirements are already provided.
2. Where smoke alarms have been installed in occupancies and dwellings that were not required to have them at the time of construction, additional smoke alarms shall not be required provided that the existing smoke alarms comply with requirements that were in effect at the time of installation.
3. Where smoke detectors connected to a fire alarm system have been installed as a substitute for smoke alarms.

[F] 704.6.1.1 Group R-1. Single- or multiple-station smoke alarms shall be installed in all of the following locations in Group R-1:

1. In sleeping areas.
2. In every room in the path of the *means of egress* from the sleeping area to the door leading from the *sleeping unit*.
3. In each story within the *sleeping unit*, including basements. For *sleeping units* with split levels and without an intervening door between the adjacent levels, a smoke alarm installed on the upper level shall suffice for the adjacent lower level provided that the lower level is less than one full story below the upper level.

[F] 704.6.1.2 Groups R-2, R-3, R-4 and I-1. Single- or multiple-station smoke alarms shall be installed and maintained in Groups R-2, R-3, R-4 and I-1 regardless of *occupant load* at all of the following locations:

1. On the ceiling or wall outside of each separate sleeping area in the immediate vicinity of bedrooms.
2. In each room used for sleeping purposes.
3. In each story within a *dwelling unit*, including *basements* but not including crawl spaces and uninhabitable attics. In *dwellings* or *dwelling units* with split levels and without an intervening door between the adjacent levels, a smoke alarm installed on the upper level shall suffice for the adjacent lower level provided that the lower level is less than one full story below the upper level.

[F] 704.6.1.3 Installation near cooking appliances. Smoke alarms shall not be installed in the following locations unless this would prevent placement of a smoke alarm in a location required by Section 704.6.1.1 or 704.6.1.2.

1. Ionization smoke alarms shall not be installed less than 20 feet (6096 m) horizontally from a permanently installed cooking appliance.
2. Ionization smoke alarms with an alarm-silencing switch shall not be installed less than 10 feet (3048 mm) horizontally from a permanently installed cooking appliance.
3. Photoelectric smoke alarms shall not be installed less than 6 feet (1829 mm) horizontally from a permanently installed cooking appliance.

[F] 704.6.1.4 Installation near bathrooms. Smoke alarms shall be installed not less than 3 feet (914 mm) horizontally from the door or opening of a bathroom that contains a bathtub or shower unless this would prevent placement of a smoke alarm required by Section 704.6.1.1 or 704.6.1.2.

[F] 704.6.2 Interconnection. Where more than one smoke alarm is required to be installed within an individual *dwelling* or *sleeping unit*, the smoke alarms shall be interconnected in such a manner that the activation of one alarm will activate all of the alarms in the individual unit. Physical interconnection of smoke alarms shall not be required where listed wireless alarms are installed and all alarms sound upon activation of one alarm. The alarm shall be clearly audible in all bedrooms over background noise levels with all intervening doors closed.

Exceptions:

1. Interconnection is not required in buildings that are not undergoing *alterations*, repairs or construction of any kind.
2. Smoke alarms in existing areas are not required to be interconnected where *alterations* or repairs do not result in the removal of interior wall or ceiling finishes exposing the structure, unless there is an attic, crawl space or basement available that could provide access for interconnection without the removal of interior finishes.

[F] 704.6.3 Power source. Single-station smoke alarms shall receive their primary power from the building wiring provided that such wiring is served from a commercial source and shall be equipped with a battery backup. Smoke alarms with integral strobes that are not equipped with battery backup shall be connected to an emergency electrical system. Smoke alarms shall emit a signal when the batteries are low. Wiring shall be permanent and without a disconnecting switch other than as required for overcurrent protection.

Exceptions:

1. Smoke alarms are permitted to be solely battery operated in existing buildings where construction is not taking place.
2. Smoke alarms are permitted to be solely battery operated in buildings that are not served from a commercial power source.

INTERNATIONAL CODE COUNCIL®

Copyright © 2017 ICC. ALL RIGHTS RESERVED. Accessed by Ashley Stathatos (astathatos@annatexas.gov), (-) Order Number #100879786 on May 06, 2020 08:14 AM (PDT) pursuant to License Agreement with ICC. No further reproduction, no further reproductions by any third party, or distribution authorized. Single user only, copying and networking prohibited. ANY UNAUTHORIZED REPRODUCTION OR DISTRIBUTION IS A VIOLATION OF THE FEDERAL COPYRIGHT ACT AND THE LICENSE AGREEMENT, AND SUBJECT TO CIVIL AND CRIMINAL PENALTIES THEREUNDER.

100879786

3. Smoke alarms are permitted to be solely battery operated in existing areas of buildings undergoing *alterations* or repairs that do not result in the removal of interior walls or ceiling finishes exposing the structure, unless there is an attic, crawl space or *basement* available that could provide access for building wiring without the removal of interior finishes.

[F] 704.6.4 Smoke detection system. Smoke detectors listed in accordance with UL 268 and provided as part of the building's fire alarm system shall be an acceptable alternative to single- and multiple-station smoke alarms and shall comply with the following:

1. The fire alarm system shall comply with all applicable requirements in Section 907 of the *International Fire Code*.
2. Activation of a smoke detector in a dwelling or sleeping unit shall initiate alarm notification in the *dwelling* or *sleeping unit* in accordance with Section 907.5.2 of the *International Fire Code*.
3. Activation of a smoke detector in a *dwelling* or *sleeping unit* shall not activate alarm notification appliances outside of the *dwelling* or *sleeping unit*, provided that a supervisory signal is generated and monitored in accordance with Section 907.6.6 of the *International Fire Code*.

[F] 704.7 Single- and multiple-station smoke alarms. Single- and multiple-station smoke alarms shall be tested and maintained in accordance with the manufacturer's instructions. Smoke alarms that do not function shall be replaced. Smoke alarms installed in one- and two-family dwellings shall be replaced not more than 10 years from the date of manufacture marked on the unit, or shall be replaced if the date of manufacture cannot be determined.

SECTION 705
CARBON MONOXIDE ALARMS AND DETECTION

[F] 705.1 General. Carbon monoxide alarms shall be installed in dwellings in accordance with Section 1103.9 of the *International Fire Code*, except that alarms in dwellings covered by the *International Residential Code* shall be installed in accordance with Section R315 of that code.

[F] 705.2 Carbon monoxide alarms and detectors. Carbon monoxide alarms and carbon monoxide detection systems shall be maintained in accordance with NFPA 720. Carbon monoxide alarms and carbon monoxide detectors that become inoperable or begin producing end-of-life signals shall be replaced.

CITY OF SAN ANTONIO

INTERNATIONAL CODE COUNCIL®
Copyright © 2017 ICC. ALL RIGHTS RESERVED. Accessed by Ashley Stathatos (astathatos@annatexas.gov), (-) Order Number #100879786 on May 06, 2020 08:14 AM (PDT) pursuant to License Agreement with ICC. No further reproduction, no further reproductions by any third party, or distribution authorized. Single user only, copying and networking prohibited. ANY UNAUTHORIZED REPRODUCTION OR DISTRIBUTION IS A VIOLATION OF THE FEDERAL COPYRIGHT ACT AND THE LICENSE AGREEMENT, AND SUBJECT TO CIVIL AND CRIMINAL PENALTIES THEREUNDER.

100879786

DUPLICATE

Copyright © 2017 ICC. ALL RIGHTS RESERVED. Accessed by Ashley Stathatos (astathatos@annatexas.gov), (-) Order Number #100879786 on May 06, 2020 08:14 AM (PDT) pursuant to License Agreement with ICC. No further reproduction, no further reproductions by any third party, or distribution authorized. Single user only, copying and networking prohibited. ANY UNAUTHORIZED REPRODUCTION OR DISTRIBUTION IS A VIOLATION OF THE FEDERAL COPYRIGHT ACT AND THE LICENSE AGREEMENT, AND SUBJECT TO CIVIL AND CRIMINAL PENALTIES THEREUNDER.

CHAPTER 8

REFERENCED STANDARDS

User note:

About this chapter: *This code contains numerous references to standards promulgated by other organizations that are used to provide requirements for materials and methods of construction. Chapter 8 contains a comprehensive list of all standards that are referenced in this code. These standards, in essence, are part of this code to the extent of the reference to the standard.*

This chapter lists the standards that are referenced in various sections of this document. The standards are listed herein by the promulgating agency of the standard, the standard identification, the effective date and title and the section or sections of this document that reference the standard. The application of the referenced standards shall be as specified in Section 102.7.

ASME

American Society of Mechanical Engineers
Two Park Avenue
New York, NY 10016-5990

ASME A17.1—2016/CSA B44—16: Safety Code for Elevators and Escalators
606.1

ASTM

ASTM International
100 Barr Harbor Drive, P.O. Box C700
West Conshohocken, PA 19428-2959

F1346—91 (2010): Performance Specifications for Safety Covers and Labeling Requirements for All Covers for Swimming Pools, Spas and Hot Tubs
303.2

ICC

International Code Council
500 New Jersey Avenue, NW
6th Floor
Washington, DC 20001

IBC—18: International Building Code®
102.3, 201.3, 304.1.1, 305.1.1, 306.1.1, 401.3, 604.3.1.1, 604.3.2.1, 702.3, 704.4.2

IECC—18: International Energy Conservation Code®
102.3

IEBC—18: International Existing Building Code®
102.3, 201.3, 304.1.1, 305.1.1, 306.1.1

IFC—18: International Fire Code®
102.3, 201.3, 604.3.1.1, 702.1, 702.2, 704.1, 704.1.2, 704.1.3, 704.3, 704.3.1, 704.4.2, 704.4.3, 704.5.1, 704.6.4, 705.1

IFGC—18: International Fuel Gas Code®
102.3, 201.3

IMC—18: International Mechanical Code®
102.3, 201.3

IPC—18: International Plumbing Code®
102.3, 201.3, 502.5, 505.1, 505.5.1, 602.2, 602.3

IRC—18: International Residential Code®
102.3, 201.3

IZC—18: International Zoning Code®
102.3, 201.3

PUBLICATE

INTERNATIONAL CODE COUNCIL®
Copyright © 2017 ICC. ALL RIGHTS RESERVED. Accessed by Ashley Stathatos (astathatos@annatexas.gov), (-) Order Number #100879786 on May 06, 2020 08:14 AM (PDT) pursuant to License Agreement with ICC. No further reproduction, no further reproductions by any third party, or distribution authorized. Single user only, copying and networking prohibited. ANY UNAUTHORIZED REPRODUCTION OR DISTRIBUTION IS A VIOLATION OF THE FEDERAL COPYRIGHT ACT AND THE LICENSE AGREEMENT, AND SUBJECT TO CIVIL AND CRIMINAL PENALTIES THEREUNDER.

100879786

NFPA

National Fire Protection Association
1 Batterymarch Park
Quincy, MA 02169-7471

10—17: Standard for Portable Fire Extinguishers
Table 704.2

12—15: Standard on Carbon Dioxide Extinguishing Systems
Table 704.2

12A—15: Standard on Halon 1301 Fire Extinguishing Systems
Table 704.2

17—17: Standard for Dry Chemical Extinguishing Systems
Table 704.2

17A—17: Standard for Wet Chemical Extinguishing Systems
Table 704.2

25—17: Standard for the Inspection, Testing and Maintenance of Water-Based Fire Protection Systems
Table 704.2

70—17: National Electrical Code
102.3, 201.3, 604.2

72—16: National Fire Alarm and Signaling Code
Table 704.2

80—16: Standard for Fire Doors and Other Opening Protectives
703.3.3, 703.4

105—16: Standard for Smoke Door Assemblies and Other Opening Protectives
703.3.2

204—15: Standard for Smoke and Heat Venting
Table 704.2

720—15: Standard for the Installation of Carbon Monoxide (CO) Detection and Warning Equipment
[F] 705.2

750—14: Standard on Water Mist Fire Protection Systems
Table 704.2

2001—15: Standard on Clean Agent Fire Extinguishing Systems
Table 704.2

UL

Underwriters Laboratories, LLC
333 Pfingsten Road
Northbrook, IL 60062

268—09: Smoke Detectors for Fire Alarm Systems
704.6.4

UNOFFICIAL

Copyright © 2017 ICC. ALL RIGHTS RESERVED. Accessed by Ashley Stathatos (astathatos@annatexas.gov), (-) Order Number #100879786 on May 06, 2020 08:14 AM (PDT) pursuant to License Agreement with ICC. No further reproduction, no further reproductions by any third party, or distribution authorized. Single user only, copying and networking prohibited. ANY UNAUTHORIZED REPRODUCTION OR DISTRIBUTION IS A VIOLATION OF THE FEDERAL COPYRIGHT ACT AND THE LICENSE AGREEMENT, AND SUBJECT TO CIVIL AND CRIMINAL PENALTIES THEREUNDER.

APPENDIX A

BOARDING STANDARD

The provisions contained in this appendix are not mandatory unless specifically referenced in the adopting ordinance.

User note:

About this appendix: *Appendix A provides minimum specifications for boarding a structure. This can be utilized by a jurisdiction as a set of minimum requirements in order to result in consistent boarding quality. These requirements also provide a reasonable means to eliminate having to approve numerous methods or materials for the boarding and securing of a structure. It is important to note that the provisions of Appendix A are not mandatory unless specifically referenced in the adopting ordinance of the authority having jurisdiction.*

A101
GENERAL

A101.1 General. Windows and doors shall be boarded in an *approved* manner to prevent entry by unauthorized persons and shall be painted to correspond to the color of the existing structure.

A102
MATERIALS

A102.1 Boarding sheet material. Boarding sheet material shall be minimum $^1/_2$-inch-thick (12.7 mm) wood structural panels complying with the *International Building Code*.

A102.2 Boarding framing material. Boarding framing material shall be minimum nominal 2-inch by 4-inch (51 mm by 102 mm) solid sawn lumber complying with the *International Building Code*.

A102.3 Boarding fasteners. Boarding fasteners shall be minimum $^3/_8$-inch-diameter (9.5 mm) carriage bolts of such a length as required to penetrate the assembly and as required to adequately attach the washers and nuts. Washers and nuts shall comply with the *International Building Code*.

A103
INSTALLATION

A103.1 Boarding installation. The boarding installation shall be in accordance with Figures A103.1(1) and A103.1(2) and Sections A103.2 through A103.5.

A103.2 Boarding sheet material. The boarding sheet material shall be cut to fit the door or window opening neatly or shall be cut to provide an equal overlap at the perimeter of the door or window.

A103.3 Windows. The window shall be opened to allow the carriage bolt to pass through or the window sash shall be removed and stored. The 2-inch by 4-inch (51 mm by 102 mm) strong back framing material shall be cut minimum 2 inches (51 mm) wider than the window opening and shall be placed on the inside of the window opening 6 inches (152 mm) minimum above the bottom and below the top of the window opening. The framing and boarding shall be pre-drilled. The assembly shall be aligned and the bolts, washers and nuts shall be installed and secured.

A103.4 Door walls. The door opening shall be framed with minimum 2-inch by 4-inch (51 mm by 102 mm) framing material secured at the entire perimeter and vertical members at a maximum of 24 inches (610 mm) on center. Blocking shall also be secured at a maximum of 48 inches (1219 mm) on center vertically. Boarding sheet material shall be secured with screws and nails alternating every 6 inches (152 mm) on center.

A103.5 Doors. Doors shall be secured by the same method as for windows or door openings. One door to the structure shall be available for authorized entry and shall be secured and locked in an *approved* manner.

A104
REFERENCED STANDARD

IBC—18	International Building Code	A102.1, A102.2, A102.3

DRAFT

INTERNATIONAL CODE COUNCIL®
Copyright © 2017 ICC. ALL RIGHTS RESERVED. Accessed by Ashley Stathatos (astathatos@annatexas.gov), (-) Order Number #100879786 on May 06, 2020 08:14 AM (PDT) pursuant to License Agreement with ICC. No further reproduction, no further reproductions by any third party, or distribution authorized. Single user only, copying and networking prohibited. ANY UNAUTHORIZED REPRODUCTION OR DISTRIBUTION IS A VIOLATION OF THE FEDERAL COPYRIGHT ACT AND THE LICENSE AGREEMENT, AND SUBJECT TO CIVIL AND CRIMINAL PENALTIES THEREUNDER.

APPENDIX A

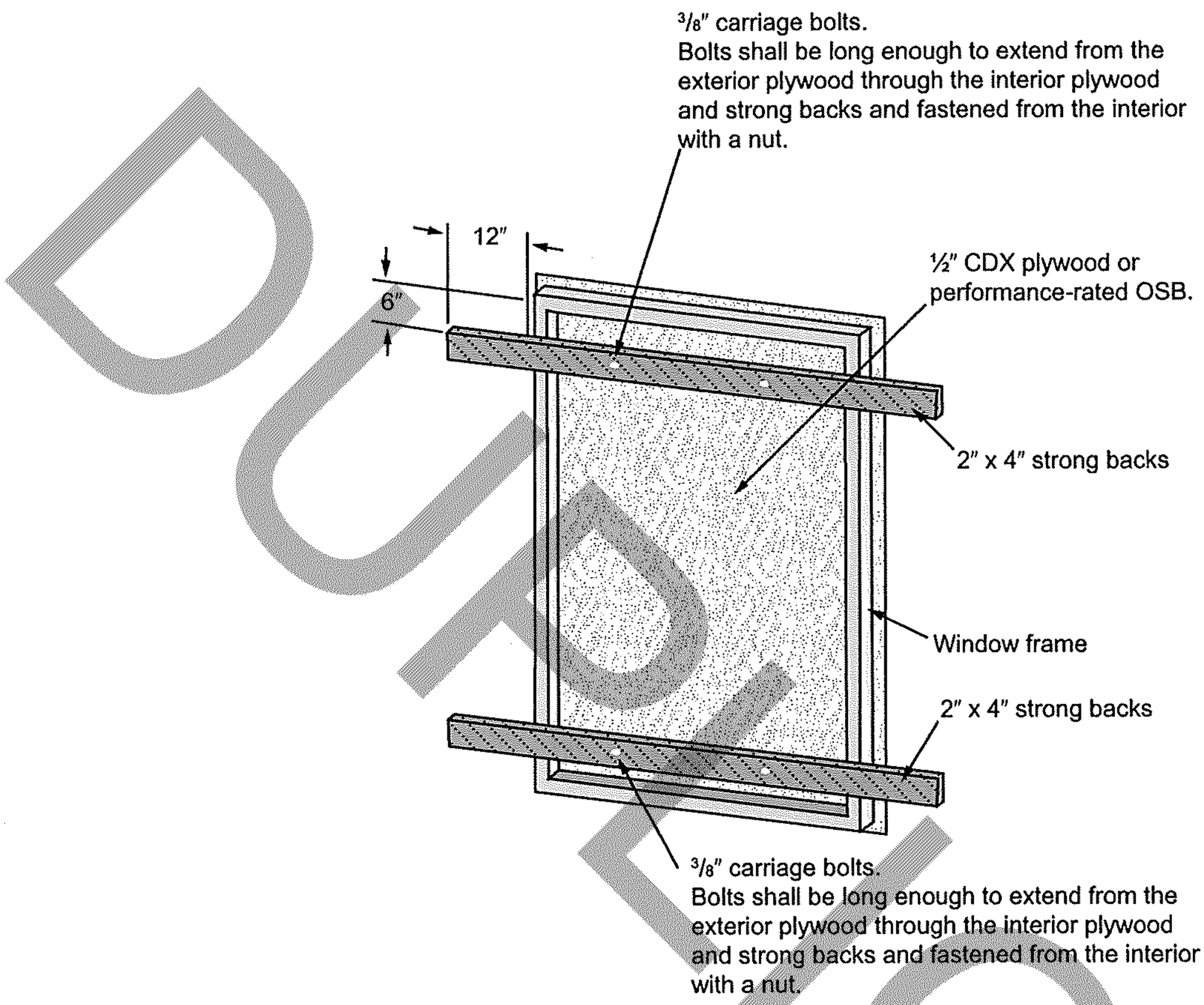

FIGURE A103.1(1)
BOARDING OF DOOR OR WINDOW

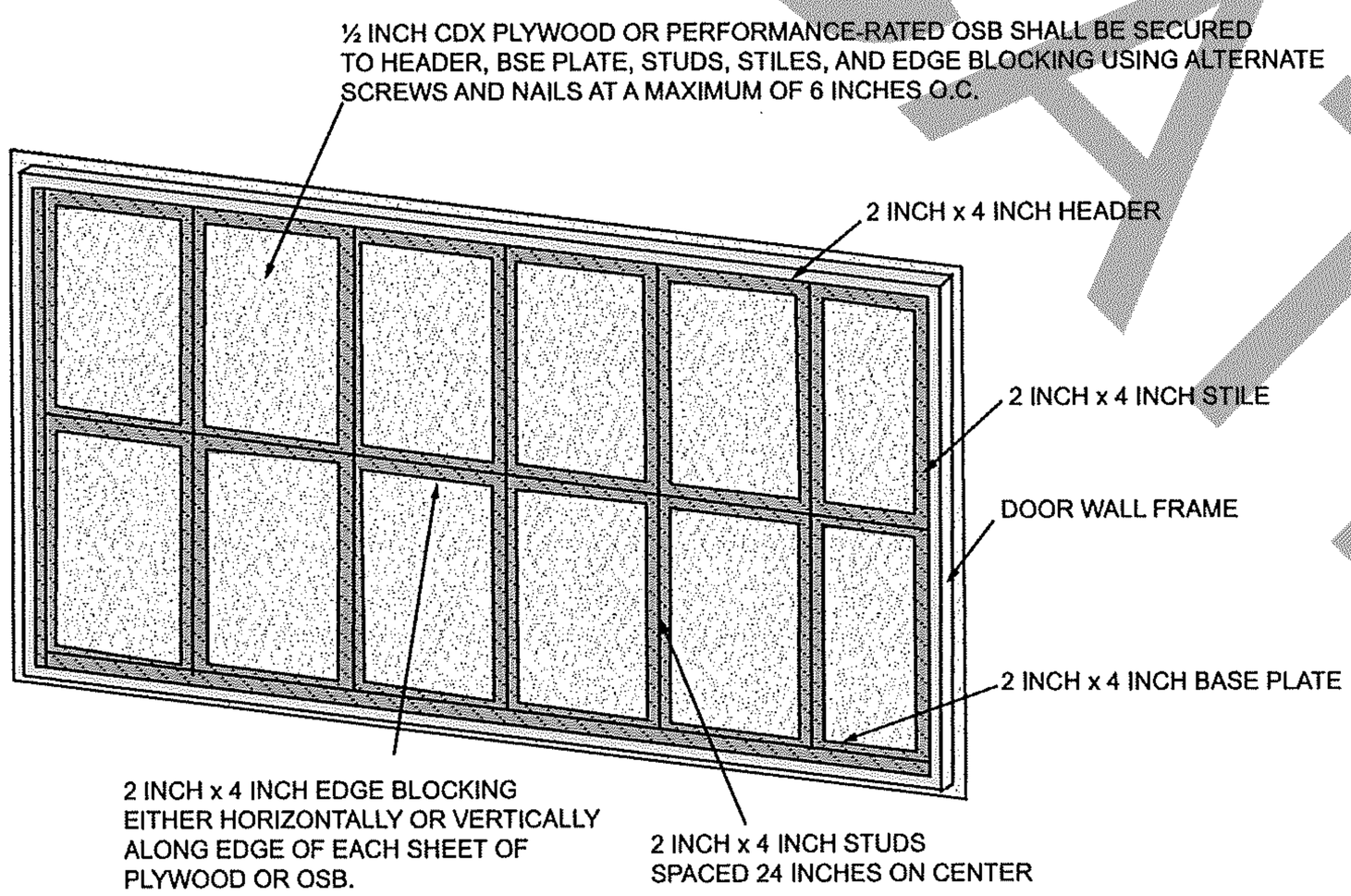

For SI: 1 inch = 25.4 mm.

FIGURE A103.1(2)
BOARDING OF DOOR WALL

INTERNATIONAL CODE COUNCIL®
Copyright © 2017 ICC. ALL RIGHTS RESERVED. Accessed by Ashley Stathatos (astathatos@annatexas.gov), (-) Order Number #100879786 on May 06, 2020 08:14 AM (PDT) pursuant to License Agreement with ICC. No further reproduction, no further reproductions by any third party, or distribution authorized. Single user only, copying and networking prohibited. ANY UNAUTHORIZED REPRODUCTION OR DISTRIBUTION IS A VIOLATION OF THE FEDERAL COPYRIGHT ACT AND THE LICENSE AGREEMENT, AND SUBJECT TO CIVIL AND CRIMINAL PENALTIES THEREUNDER.

100879786

INDEX

A

ACCESS
- Emergency egress 702
- From bedrooms 404.4.2
- Plumbing fixtures, access for cleaning 504.2
- To public way 702.1
- Toilet room as passageway 503.1
- Water closet 404.4.3

ADJACENT
- Privacy (hotel units, rooming units). 404.1

ADMINISTRATION
- Scope 101.2

AGENT (See also OPERATOR, OWNER)
- Definition. 202

AIR
- Combustion air 603.5

AISLES
- Minimum width 702.2

ALTERATION
- Applicability of other codes. 102.3
- Inspection 104.2
- Prosecution. 106.3
- Unlawful acts 106.1

ANCHOR
- Anchored, definition 202
- Architectural trim. 304.8
- Signs, marquees and awnings 304.9
- Unsafe conditions 304.1.1

APPEAL
- Application 111.1
- Board decision 111.6
- Board of appeals 111.2
- Court review 111.7
- Disqualification 111.2.3
- Financial interest 111.2.3
- Hearing, emergency orders 109.6
- Membership 111.2
- Notice of appeal 111.1
- Postponed hearing 111.5
- Records 104.6
- Right to appeal 111.1
- Vote 111.6

APPLIANCE
- Cooking 403.3, 602.2
- Mechanical 603.1

APPLICABILITY
- Application of references 102.9
- General. 102.1
- Other laws. 102.10
- Referenced codes and standards. 102.7

APPROVAL
- Alternatives 105.2
- Authority 104.1, 105.2
- Modifications. 105.1
- Research reports 105.6
- Used material and equipment. 105.4

APPROVED
- Alternative materials, methods and equipment 105.2
- Definition. 202
- Energy conservation devices 603.6
- Garbage storage facilities 308.3.1
- Modifications. 105.1
- Used materials and equipment. 105.4

ARTIFICIAL
- Lighting of habitable rooms. 401.3
- Lighting of other spaces 402.3

AUTOMOBILE
- Motor vehicles. 302.8

AWNING
- Signs, marquees and awnings 304.9

B

BALCONY
- Handrails and guardrails. 304.12

BASEMENT
- Definition. 202
- Hatchways 304.16
- Windows 304.17

BATHROOM
- Common bathrooms 502.3, 503.1
- Hotels 502.3
- Lighting 605.3
- Locks. 503.1
- Outlets required 605.2
- Privacy 503.1
- Ventilation 403.2

BATHTUB
- Dwelling units 502.1
- Rooming houses. 502.2
- Sewage system. 506.1
- Water-heating facilities 505.4
- Water system 505.1

BOARDING
- Boarding standard. . . . . .Appendix A

DRAFT

INTERNATIONAL CODE COUNCIL®

Copyright © 2017 ICC. ALL RIGHTS RESERVED. Accessed by Ashley Stathatos (astathatos@annatexas.gov), (-) Order Number #100879786 on May 06, 2020 08:14 AM (PDT) pursuant to License Agreement with ICC. No further reproduction, no further reproductions by any third party, or distribution authorized. Single user only, copying and networking prohibited. ANY UNAUTHORIZED REPRODUCTION OR DISTRIBUTION IS A VIOLATION OF THE FEDERAL COPYRIGHT ACT AND THE LICENSE AGREEMENT, AND SUBJECT TO CIVIL AND CRIMINAL PENALTIES THEREUNDER.

100879786

BOILER
Unsafe equipment 108.1.2

C

CAPACITY
Heating facilities. 602.2, 602.3, 602.4
CAR (See AUTOMOBILE)
CARBON MONOXIDE ALARMS AND DETECTION
Installation 705.1
Maintenance 705.2
CEILING
Basement rooms 404.3
Fire-resistance ratings 703.1
Interior surfaces 305.3
Minimum height 404.3
Sleeping rooms 404.3
CHANGE, MODIFY
Application of other codes 102.3
CHIMNEY
Exterior structure 304.11
Flue 603.2, 603.3
CLEANING
Access for cleaning 504.2
Disposal of garbage. 308.3
Disposal of rubbish 308.2
Interior and exterior sanitation 308.1
Interior surfaces 305.3
Plumbing facilities, maintained 504.1
Required plumbing facilities. 502
Responsibility of persons. 305.1
Trash containers 308.3.2
Vacant structures and land 301.3
CLEARANCE
Heating facilities. 603.3
Plumbing fixtures 504.2
CLOSING
Streets 109.3
Vacant structures. 108.2
CLOTHES DRYER
Exhaust 403.5
CODE OFFICIAL
Condemnation 108.1
Demolition 110
Duties. 104
Emergency order 109
Enforcement authority 104.1
Failure to comply with demolition order 110.3
Identification. 104.3
Inspections. 104.2
Liability, relief of personal. 103.4
Membership of board of appeals 111.2
Notice of violation. 104.5, 107
Notices and orders 107
Official records 104.6
Personal liability 103.4
Placarding 108.4
Prosecution 106.3
Removal of placard 108.4.1
Right of entry 104.3
Transfer of ownership 107.6
Vacant structures 108.2
Voting of appeals board 111.2, 111.6
COMBUSTION
Combustion air 603.5
COMPONENT SERVICEABILITY
Unsafe conditions. 306.1.1
CONDEMNATION
Closing of vacant structures. 108.2
Failure to comply 110.3
General 108.1
Notices and orders 108.2, 108.3
Placarding 108.4
Removal of placard 108.4.1
CONFLICT
Conflict of interest 111.2.3
Violations 106.1
CONNECTION
Sewage system 506.1
Water heating. 505.4
Water system. 505.1
CONSTRUCTION
Existing structures 101.2
CONTAINER
Garbage 308.3.2
Rubbish storage. 308.2.1
CONTINUOUS
Unobstructed egress 702.1
CONTROL
Rodent control 302.5, 304.5
Safety controls 603.4
Weed 302.4
COOLING
Cooling towers 304.11
CORRIDOR
Accumulation of rubbish. 308.1
Light 402.2
Lighting fixtures 605.3
Obstructions. 702.1, 702.2
Ratings maintained 703

UNOFFICIAL

INTERNATIONAL CODE COUNCIL®
Copyright © 2017 ICC. ALL RIGHTS RESERVED. Accessed by Ashley Stathatos (astathatos@annatexas.gov), (-) Order Number #100879786 on May 06, 2020 08:14 AM (PDT) pursuant to License Agreement with ICC. No further reproduction, no further reproductions by any third party, or distribution authorized. Single user only, copying and networking prohibited. ANY UNAUTHORIZED REPRODUCTION OR DISTRIBUTION IS A VIOLATION OF THE FEDERAL COPYRIGHT ACT AND THE LICENSE AGREEMENT, AND SUBJECT TO CIVIL AND CRIMINAL PENALTIES THEREUNDER.

100879786

D

DAMP, DAMPNESS
Roofs 304.7
Window, door frames 304.13
DANGEROUS, HAZARDOUS
Condemnation 108.1
Demolition 110
Electrical hazards 604.3, 604.3.1
Existing remedies 102.4
Imminent danger 202
Unsafe equipment 108.1.2
Unsafe structures or premises 108.1.5
DECKS
Handrails and guardrails 304.12
Maintenance 304.2, 304.10
DEMOLITION
Existing remedies 102.4
Failure to comply 110.3
General 110
Order 110.2
Salvage materials 110.4
DETECTORS
Smoke 704
DETERIORATION
Components of systems 306.1.1
Definition 202
Exterior structure 304.1.1
Exterior walls 304.6
DIRECT
Egress 702.1
DISPOSAL
Disposal of garbage 308.3
Disposal of rubbish 308.2
DOOR
Exit doors 702.3
Fire 703.2
Hardware 304.15
Insect screens 304.14
Interior surfaces 305.3
Locks 304.15, 702.3
Maintenance 304.13, 304.15
Weather tight 304.13
Window and door frames 304.13
DORMITORY (ROOMING HOUSE, HOTEL, MOTEL)
Locked doors 702.3
Privacy 503.1, 503.2
DRAFT STOPPING
Maintenance 703.3.1
DRAIN, DRAINAGE
Basement hatchways 304.16
Plumbing connections 506
Storm drainage 507
DUCT
Exhaust duct 304.9
Duct systems 607
DUST
Process ventilation 403.4
DWELLING
Cleanliness 305.1, 308.1
Definition 202
Electrical 604.1
Heating facilities 602
Required facilities 502

E

EGRESS
Aisles 702.2
Emergency escape 702.4
General 702.1
Lighting 402.2
Locked doors 702.3
Obstructions prohibited 702.1
Stairs, porches and railings 304.10, 305.4, 305.5, 307.1
ELECTRIC, ELECTRICAL EQUIPMENT
Abatement of hazards, fire exposure 604.3.2
Abatement of hazards, water exposure 604.3.1
Condemnation 108.1
Electrical equipment 604.3.1.1
Facilities required 604.1
Hazards 604.3
Installation 605.1
Lighting fixtures 605.3
Receptacles 604.3, 605.2
Responsibility 601.2
Service 604.2
ELEVATOR, ESCALATORS, DUMBWAITERS
Condemnation 108.1
General 606.1
Maintenance 606.1, 606.2
EMERGENCY
Emergency escape openings 702.4
Emergency measures 109
Emergency orders 109.1
ENFORCEMENT
Duties and powers 104
Scope 101.2
EQUIPMENT
Alternative 105.2
Combustion air 603.5

INTERNATIONAL CODE COUNCIL®
Copyright © 2017 ICC. ALL RIGHTS RESERVED. Accessed by Ashley Stathatos (astathatos@annatexas.gov), (-) Order Number #100879786 on May 06, 2020 08:14 AM (PDT) pursuant to License Agreement with ICC. No further reproduction, no further reproductions by any third party, or distribution authorized. Single user only, copying and networking prohibited. ANY UNAUTHORIZED REPRODUCTION OR DISTRIBUTION IS A VIOLATION OF THE FEDERAL COPYRIGHT ACT AND THE LICENSE AGREEMENT, AND SUBJECT TO CIVIL AND CRIMINAL PENALTIES THEREUNDER.

100879786

Condemnation 108.1.2, 108.3
Electrical installation 605.1
Emergency order 109.1
Energy conservation devices 603.6
Installation 603.1
Interior structure 305.1
Placarding 108.4, 108.5
Prohibited use 108.5
Responsibility 601.2
Safety controls 603.4
Scope 101.2
Scope, mechanical and electrical 601.1
Support, definition 202
Unsafe 108.1.2
Used 105.4

EXHAUST
Clothes dryer 403.5
Exhaust ducts 304.9
Process ventilation 403.4

EXISTING
Remedies 102.4
Scope 101.2
Structural members 304.1.1, 304.4
Structures 101.3

EXTERIOR
Decorative features 304.8
Exterior structure 304
Exterior walls 304.6
Painting 304.2, 304.6
Rodent harborage 302.5, 304.5
Sanitation 304.1
Scope 301.1
Stair 304.10
Street numbers 304.3
Unsafe conditions 304.1.1
Weather tight 304.13

F

FAN
Exhaust vents 302.6

FEES, EXPENSES, COST
Closing vacant structures 108.2
Demolition 110.1, 110.3, 110.4
Extermination 309.2, 309.3, 309.4, 309.5
General 103.5
Relief from personal liability 103.4

FENCE
Accessory 302.7
Maintenance 304.2

FIRE
Blocking Maintenance 703.3.1

FIRE DEPARTMENT
Connection access 704.5.1, 704.5.2
Connections 704.5

FIRE PROTECTION SYSTEMS
Emergency impairments 704.3.1
Equipment 704.4, 704.4.1, 704.4.2
Inspection 704.1, 704.1.3, 704.2
Installation 704.1.1
Maintenance 704.1, 704.1.3, 704.2
Out of service 704.3
Records of maintenance 704.2.1
Required systems 704.1.2, 704.2.2
Smoke alarms 704.6
Smoke detections systems 704.6.4
Termination of service 704.4.3
Testing 704.1, 704.1.3, 704.2

FIRE-RESISTANCE RATINGS
Ceilings 703.5
Draft stopping 703.3.1
Fire barriers 703.3.3
Fire blocking 703.3.1
Fire partitions 703.3.3
Fire walls 703.3.3
Maintenance 703.3
Opening protective 703.4
Shafts 703.7
Smoke barriers 703.3.2
Smoke partitions 703.3.2
Unsafe conditions 703.2

FLAMMABLE LIQUID
Containers 108.1.2

FLOOR, FLOORING
Area for sleeping purposes 404.4.1
Fire-resistance ratings 703.1
Interior surfaces 305.1, 305.3
Space requirements 404.4.1, 404.6

FOOD PREPARATION
Cooking equipment 403.3
Sanitary condition 305.1, 404.7
Ventilation 403.4

FOUNDATION
Condemnation 108.1.1
Foundation walls 304.5
Unsafe conditions 304.1.1, 305.1.1

FRAME
Window and door frames 304.13

G

GAS
Energy conservation devices 603.6
Exhaust vents 302.6

INTERNATIONAL CODE COUNCIL®

Copyright © 2017 ICC. ALL RIGHTS RESERVED. Accessed by Ashley Stathatos (astathatos@annatexas.gov), (-) Order Number #100879786 on May 06, 2020 08:14 AM (PDT) pursuant to License Agreement with ICC. No further reproduction, no further reproductions by any third party, or distribution authorized. Single user only, copying and networking prohibited. ANY UNAUTHORIZED REPRODUCTION OR DISTRIBUTION IS A VIOLATION OF THE FEDERAL COPYRIGHT ACT AND THE LICENSE AGREEMENT, AND SUBJECT TO CIVIL AND CRIMINAL PENALTIES THEREUNDER.

100879786

GLAZING
Materials 304.13.1
GRADE
Drainage 302.2, 507
GUARD
Anchorage and maintenance 304.12
Basement windows 304.18.2
Definition 202

H

HABITABLE
Definition 202
Light 402
Minimum ceiling height 404.3
Minimum room width 404.2
Required plumbing facilities 502
Residential heating facilities 602.2, 602.3
Space requirements 404.4.1
Ventilation 403
HANDRAILS AND GUARDRAILS
Handrails 304.12, 305.5, 307.1
Stairs and porches 304.10
HARDWARE
Door hardware 304.15, 702.3
Openable windows 304.13.2
HAZARDOUS (See DANGEROUS, HAZARDOUS)
HEAT, HEATING
Energy conservation devices 603.6
Fireplaces 603.1
Heating 603.1
Mechanical equipment 603.1
Required capabilities 602
Residential heating 602.2, 602.3
Supply 602.3
Water heating facilities 505.4
Water system 505
HEIGHT
Minimum ceiling height 404.3
HOT (See HEAT, HEATING)
HOTELS, ROOMING HOUSES AND DORMITORY UNITS, MOTELS
Definition 202
Locked doors 702.3
Required facilities 502
Toilet rooms 503
HOUSEKEEPING UNIT
Definition 202

I

IDENTIFICATION
Code official 104.4
INFESTATION
Condemnation 108.1.3
Definition 202
Insect and rodent 302.5, 304.14, 309.1
INSECTS
Infestation 309.1
Insect screens 304.14
Pest elimination 309
INSPECTIONS
General 104.2
Right of entry 104.3
INSPECTOR
Identification 104.4
Inspections 104.2
Records 104.6
INTENT
Code 101.3
INTERIOR
Interior structure 305
Interior surfaces 305.3
Means of egress 702
Sanitation 305.1
Unsafe conditions 305.1.1

J

JURISDICTION
Title 101.1

K

KITCHEN
Electrical outlets required 605.2
Minimum width 404.2
Prohibited use 404.4.4
Room lighting 605.3
Water heating facilities 505.4

L

LANDING
Handrails and guards 304.12, 305.5, 306.1
Maintenance 304.10, 305.4
LAUNDRY
Room lighting 605.3
Water-heating facilities 505.4

DRAFT

INTERNATIONAL CODE COUNCIL®
Copyright © 2017 ICC. ALL RIGHTS RESERVED. Accessed by Ashley Stathatos (astathatos@annatexas.gov), (-) Order Number #100879786 on May 06, 2020 08:14 AM (PDT) pursuant to License Agreement with ICC. No further reproduction, no further reproductions by any third party, or distribution authorized. Single user only, copying and networking prohibited. ANY UNAUTHORIZED REPRODUCTION OR DISTRIBUTION IS A VIOLATION OF THE FEDERAL COPYRIGHT ACT AND THE LICENSE AGREEMENT, AND SUBJECT TO CIVIL AND CRIMINAL PENALTIES THEREUNDER.

100879786

LAVATORY
Hotels . . . 502.3
Required facilities . . . 502
Rooming houses . . . 502.2
Sanitary drainage system . . . 506
Water-heating facilities . . . 505.4
Water system . . . 505
LEASE (SELL, RENT)
Heat supplied . . . 602.3
Salvage materials . . . 110.4
Transfer of ownership . . . 107.6
LIEN
Closing of vacant structures . . . 108.2
Demolition . . . 110.3
Failure to comply . . . 110.3
LIGHT, LIGHTING
Common halls and stairways . . . 402.2, 605.3
General . . . 402
Habitable rooms . . . 402.1
Kitchen . . . 605.3
Laundry rooms . . . 605.3
Luminaires . . . 605.3
Other spaces . . . 402.3
Responsibility . . . 401.2
Scope . . . 101.2
Toilet rooms . . . 605.3
LIVING ROOM
Room area . . . 404.4.1
LOAD, LOADING
Elevators, escalators and dumbwaiters . . . 606.1
Handrails and guardrails . . . 304.12, 305.5
Live load . . . 304.4, 305.2
Stairs and porches . . . 304.10, 305.2
Structural members . . . 304.4, 305.2

M

MAINTENANCE
Required . . . 102.2
MATERIAL
Alternative . . . 105.2
Salvage . . . 110.4
Used . . . 105.4
MEANS OF EGRESS (See EGRESS)
MECHANICAL
Installation . . . 603.1
Responsibility . . . 601.2
Scope . . . 601.1
Ventilation, general . . . 403
Ventilation, toilet rooms . . . 403.2
MINIMUM
Ceiling height . . . 404.3
Room area . . . 404.4.1
Room width . . . 404.2
MODIFICATION
Approval . . . 105.1
MOTEL (See HOTELS)
MOTOR VEHICLES
Inoperative . . . 302.8
Painting . . . 302.8

N

NATURAL
Lighting . . . 401.3, 402
Ventilation . . . 401.3, 403
NOTICES AND ORDERS
Appeal . . . 111.1
Form . . . 107.2
Method of service . . . 107.3
Orders . . . 107
Owner, responsible person . . . 107.1
Penalties . . . 107.5
Placarding of structure . . . 108.4
Transfer of ownership . . . 107.6
Unauthorized tampering . . . 107.4
Vacating structure . . . 108.2
NOXIOUS
Process ventilation . . . 403.4
Weeds . . . 302.4
NUISANCE
Closing of vacant structures . . . 108.2

O

OBSTRUCTION
Light . . . 402.1
Right of entry . . . 104.3
OCCUPANCY (See USE)
OPENABLE
Locked doors . . . 702.3
Windows . . . 304.13.2, 403.1
OPENING PROTECTIVES
Closers . . . 703.8
Door operation . . . 703.4.3
Hold-open devices . . . 703.4.2
Maintenance . . . 703.4
Signs . . . 703.4.1
Testing . . . 703.6
OPERATOR
Definition . . . 202
ORDER (See NOTICE)
ORDINANCE, RULE
Applicability . . . 102
Application for appeal . . . 111.1

DRAFT

INTERNATIONAL CODE COUNCIL®
Copyright © 2017 ICC. ALL RIGHTS RESERVED. Accessed by Ashley Stathatos (astathatos@annatexas.gov), (-) Order Number #100879786 on May 06, 2020 08:14 AM (PDT) pursuant to License Agreement with ICC. No further reproduction, no further reproductions by any third party, or distribution authorized. Single user only, copying and networking prohibited. ANY UNAUTHORIZED REPRODUCTION OR DISTRIBUTION IS A VIOLATION OF THE FEDERAL COPYRIGHT ACT AND THE LICENSE AGREEMENT, AND SUBJECT TO CIVIL AND CRIMINAL PENALTIES THEREUNDER.

100879786

OUTLET
Electrical 605.2
OWNER
Closing of vacant structures 108.2
Definition 202
Demolition 110
Failure to comply 110.3
Insect and rat control 302.5, 309.2, 309.4
Notice 107.1, 108.3
Pest elimination 309.2
Placarding of structure 108.4
Responsibility 301.2
Responsibility, fire safety 701.2
Responsibility, light, ventilation 401.2
Responsibility, mechanical and electrical 601.2
Responsibility, plumbing facilities 501.2
Right of entry 104.3
Rubbish storage 308.2.1
Scope 101.2
Transfer of ownership 107.6

P

PASSAGEWAY
Common hall and stairway 402.2
Interior surfaces 305.3
Toilet rooms, direct access 503.1
PENALTY
Notices and orders 107.5
Placarding of structure 108.4
Prohibited occupancy 108.5
Removal of placard 108.4.1
Scope 101.2
Violations 106.4
PEST ELIMINATION
Condemnation 108.1
Definition 202
Insect and rodent control 302.5, 304.5, 304.14, 309.1
Pest elimination 309.1
Responsibility of owner 301.2, 309.2
Responsibility of tenant-occupant . 309.3, 309.4, 309.5
PLACARD, POST
Closing 108.2
Condemnation 108.1
Demolition 110
Emergency, notice 109.1
Notice to owner 107.1, 108.3
Placarding of structure 108.4
Prohibited use 108.5
Removal 108.4.1
PLUMBING
Clean and sanitary 504.1
Clearance 504.2
Connections 505.1
Contamination 505.2
Employee's facilities 503.3
Fixtures 504.1
Required facilities 502
Responsibility 501.2
Sanitary drainage system 506
Scope 501.1
Storm drainage 507
Supply 505.3
Water heating facilities 505.4
PORCH
Handrails 304.12
Structurally sound 304.10
PORTABLE (TEMPORARY)
Cooking equipment 603.1
PRESSURE
Water supply 505.3
PRIVATE, PRIVACY
Bathtub or shower 503.1
Occupancy limitations 404.1
Required plumbing facilities 502
Sewage system 506.1
Water closet and lavatory 503.1
Water system 505.1
PROPERTY, PREMISES
Cleanliness 304.1, 308.1
Condemnation 108
Definition 202
Demolition 110
Emergency measures 109
Exterior areas 302
Failure to comply 110.3
Grading and drainage 302.2
Pest elimination, multiple occupancy . . . 302.5, 309.4
Pest elimination, single occupancy 302.5, 309.3
Responsibility 301.2
Scope 301.1
Storm drainage 507
Vacant structures and land 301.3
PROTECTION
Basement windows 304.17
Fire protection systems 704
Signs, marquees and awnings 304.9
PUBLIC
Cleanliness 304.1, 305.1
Egress 702.1
Hallway 502.3
Sewage system 506.1
Toilet facilities 502.5, 503

INTERNATIONAL CODE COUNCIL®
Copyright © 2017 ICC. ALL RIGHTS RESERVED. Accessed by Ashley Stathatos (astathatos@annatexas.gov), (-) Order Number #100879786 on May 06, 2020 08:14 AM (PDT) pursuant to License Agreement with ICC. No further reproduction, no further reproductions by any third party, or distribution authorized. Single user only, copying and networking prohibited. ANY UNAUTHORIZED REPRODUCTION OR DISTRIBUTION IS A VIOLATION OF THE FEDERAL COPYRIGHT ACT AND THE LICENSE AGREEMENT, AND SUBJECT TO CIVIL AND CRIMINAL PENALTIES THEREUNDER.

100879786

Vacant structures and land 301.3
Water system 505

PUBLIC WAY
Definition 202

R

RAIN (PREVENTION OF ENTRY INTO BUILDING EXTERIOR ENVELOPE)
Basement hatchways 304.16
Exterior walls 304.6
Grading and drainage 302.2
Roofs 304.7
Window and door frames 304.13

RECORD
Official records 104.6

REPAIR
Application of other codes 102.3
Chimneys 304.11
Demolition 110.1
Exterior surfaces 304.1
Intent 101.3
Maintenance 102.2
Signs, marquees and awnings 304.9
Stairs and porches 304.10
Weather tight 304.13
Workmanship 102.5

REPORTS
Test reports 105.3.2

RESIDENTIAL
Pest elimination 309
Residential heating 602.2
Scope 101.2

RESPONSIBILITY
Pest elimination 309
Fire safety 701.2
Garbage disposal 308.3
General 301.2
Mechanical and electrical 601.2
Persons 301.1
Placarding of structure 108.4
Plumbing facilities 501.2
Rubbish storage 308.2.1
Scope 101.2, 301.1

REVOKE, REMOVE
Demolition 110
Existing remedies 102.4
Removal of placard 108.4.1
Rubbish removal 308.2.1

RIGHT OF ENTRY
Duties and powers of code official 104.3
Inspections 104.2

RODENTS
Basement hatchways 304.16
Condemnation 108
Foundations 304.5
Guards for basement windows 304.17
Harborage 302.5
Insect and rodent control 309.1
Pest elimination 302.5, 309

ROOF
Exterior structure 304.1
Roofs 304.7
Storm drainage 507

ROOM
Bedroom and living room 404.4
Cooking facilities 403.3
Direct access 503.2
Habitable 402.1
Heating facilities 602
Light 402
Minimum ceiling heights 404.3
Minimum width 404.2
Overcrowding 404.5
Prohibited use 404.4.4
Temperature 602.5
Toilet 503
Ventilation 403

ROOMING HOUSES (See DORMITORY)

RUBBISH
Accumulation 308.1
Definition 202
Disposal 308.2
Garbage facilities 308.3.1
Rubbish storage 308.2.1

S

SAFETY, SAFE
Fire safety requirements 701, 702, 703, 704
Safety controls 603.4

SANITARY
Cleanliness 304.1, 305.1
Disposal of garbage 308.3
Disposal of rubbish 308.2
Exterior property areas 302.1
Exterior structure 304.1
Food preparation 404.7
Furnished by occupant 302.1
Grease interceptors 506.3
Interior surfaces 305.3
Plumbing fixtures 504.1
Required plumbing facilities 502
Scope 101.2

INTERNATIONAL CODE COUNCIL®

Copyright © 2017 ICC. ALL RIGHTS RESERVED. Accessed by Ashley Stathatos (astathatos@annatexas.gov), (-) Order Number #100879786 on May 06, 2020 08:14 AM (PDT) pursuant to License Agreement with ICC. No further reproduction, no further reproductions by any third party, or distribution authorized. Single user only, copying and networking prohibited. ANY UNAUTHORIZED REPRODUCTION OR DISTRIBUTION IS A VIOLATION OF THE FEDERAL COPYRIGHT ACT AND THE LICENSE AGREEMENT, AND SUBJECT TO CIVIL AND CRIMINAL PENALTIES THEREUNDER.

UNOFFICIAL

100879786

SCREENS
Insect screens 304.14
SECURITY
Basement hatchways 304.18.3
Building 304.18
Doors 304.18.1
Vacant structures and land 301.3
Windows 304.18.2
SELF-CLOSING SCREEN DOORS
Insect screens 304.14
SEPARATION
Fire-resistance ratings 703
Privacy 404.1
Separation of units 404.1
SERVICE
Electrical 604.2
Method 107.3
Notices and orders 107.1, 108.3
Service on occupant 108.3
SEWER
General 506.1
Maintenance 506.2
SHOWER
Bathtub or shower 502.1
Rooming houses 502.2
Water-heating facilities 505.4
Water system 505
SIGN
Fire door signs 703.4.1
Signs, marquees and awnings 304.9
Unauthorized tampering 107.4
SINGLE-FAMILY DWELLING
Extermination 309
SINK
Kitchen sink 502.1
Sewage system 506
Water supply 505.3
SIZE
Efficiency unit 404.6
Habitable room, light 402
Habitable room, ventilation 403
Room area 404.4.1
SMOKE ALARMS
Group R-1 . . . . . .704.6.1.1
Groups R-2, R-3, R-4 and I-1 . . . . . .704.6.1.2
Installation near bathrooms 704.6.1.4
Installation near cooking appliances 704.6.1.3
Interconnection 704.6.2
Power source 704.6.3
Testing 704.7
Where required 704.6.1
SPACE
General, light 402
General, ventilation 403
Occupancy limitations 404
Privacy 404.1
Scope 401.1
STACK
Smoke 304.11
STAIRS
Common halls and stairways, light 402.2
Exit facilities 305.4
Exterior property areas 302.3
Handrails 304.12, 305.5
Lighting 605.3
Stairs and porches 304.10
STANDARD
Referenced 102.7
STOP WORK ORDER
Authority 112.1
Emergencies 112.3
Failure to comply 112.4
Issuance 112.2
STORAGE
Food preparation 404.7
Garbage storage facilities 308.3
Rubbish storage facilities 308.2.1
Sanitation 308.1
STRUCTURE
Accessory structures 302.7
Closing of vacant structures 108.2
Definition 202
Emergency measures 109
General, condemnation 110
General, exterior 304.1
General, interior structure 305.1
Placarding of structure 108.4
Scope 301.1
Structural members 304.4, 305.2
Vacant structures and land 301.3
SUPPLY
Combustion air 603.5
Public water system 505.1
Water-heating facilities 505.4
Water supply 505.3
Water system 505
SURFACE
Exterior surfaces 304.2, 304.6
Interior surfaces 305.3
SWIMMING
Enclosure 303.2
Safety covers 303.2
Swimming pools 303.1

INTERNATIONAL CODE COUNCIL®
Copyright © 2017 ICC. ALL RIGHTS RESERVED. Accessed by Ashley Stathatos (astathatos@annatexas.gov), (-) Order Number #100879786 on May 06, 2020 08:14 AM (PDT) pursuant to License Agreement with ICC. No further reproduction, no further reproductions by any third party, or distribution authorized. Single user only, copying and networking prohibited. ANY UNAUTHORIZED REPRODUCTION OR DISTRIBUTION IS A VIOLATION OF THE FEDERAL COPYRIGHT ACT AND THE LICENSE AGREEMENT, AND SUBJECT TO CIVIL AND CRIMINAL PENALTIES THEREUNDER.

100879786

T

TEMPERATURE
Nonresidential structures 602.4
Residential buildings 602.2
Water-heating facilities 505.4
TENANT
Scope 101.2
TEST, TESTING
Agency 105.3.1
Methods 105.3.1
Reports 105.3.2
Required 105.3
TOXIC
Process ventilation 403.4
TRASH
Rubbish and garbage 308

U

UNOBSTRUCTED
Access to public way 702.1
General, egress 702.1
UNSAFE STRUCTURES AND EQUIPMENT
Abatement methods 108.6
Dangerous structure or premises 108.1.5
Equipment 108.1.2
Existing remedies 102.4
General, condemnation 108, 110
General, demolition 110
Notices and orders 107, 108.3
Record 108.7
Structures 108.1.1
USE
Application of other codes 102.3
General, demolition 110
UTILITIES
Authority to disconnect 108.2.1

V

VACANT
Abatement methods 108.6
Authority to disconnect service utilities 108.2.1
Closing of vacant structures 108.2
Emergency measure 109
Method of service 107.3, 108.3
Notice to owner or to person responsible 107, 108.3
Placarding of structure 108.4
Record 108.7
Vacant structures and land 301.3
VAPOR
Exhaust vents 302.6
VEHICLES
Inoperative 302.8
Painting 302.8
VENT
Plumbing hazard 504.3
Exhaust vents 302.6
Flue 603.2
VENTILATION
Clothes dryer exhaust 403.5
Combustion air 603.5
Definition 202
General, ventilation 403
Habitable rooms 403.1
Process ventilation 403.4
Recirculation 403.2, 403.4
Toilet rooms 403.2
VERMIN
Condemnation 108
Insect and rodent control 302.5, 309
VERTICAL SHAFTS
Required enclosure 703.7
VIOLATION
Condemnation 108
Enforcement 106.2
General 106
Notice 107, 108.3
Separate offenses 106.4
Placarding of structure 108.4
Prosecution 106.3
Strict liability offense 106.3, 202
Transfer of ownership 107.6

W

WALK
Sidewalks 302.3
WALL
Accessory structures 302.7
Exterior surfaces 304.2, 304.6
Exterior walls 304.6
Foundation walls 304.5
General, fire-resistance rating 703.1
Interior surfaces 305.3
Outlets required 605.2
Temperature measurement 602.5
WASTE
Disposal of garbage 308.3
Disposal of rubbish 308.2
Garbage storage facilities 308.3.1
WATER
Basement hatchways 304.16
Connections 506.1

UNOFFICIAL COPY

INTERNATIONAL CODE COUNCIL®

Copyright © 2017 ICC. ALL RIGHTS RESERVED. Accessed by Ashley Stathatos (astathatos@annatexas.gov), (-) Order Number #100879786 on May 06, 2020 08:14 AM (PDT) pursuant to License Agreement with ICC. No further reproduction, no further reproductions by any third party, or distribution authorized. Single user only, copying and networking prohibited. ANY UNAUTHORIZED REPRODUCTION OR DISTRIBUTION IS A VIOLATION OF THE FEDERAL COPYRIGHT ACT AND THE LICENSE AGREEMENT, AND SUBJECT TO CIVIL AND CRIMINAL PENALTIES THEREUNDER.

100879786

Contamination 505.2
General, sewage 506
General, storm drainage 507
General, water system 505
Heating 505.4
Hotels 502.3
Kitchen sink 502.1
Nonpotable water reuse 505.5, 505.5.1
Required facilities 502
Rooming houses 502.2
Supply 505.3
System 505
Toilet rooms 503
Water-heating facilities 505.4
WEATHER, CLIMATE
Heating facilities 602
WEEDS
Noxious weeds 302.4
WIDTH
Minimum room width 404.2
WINDOW
Emergency escape 702.4
Glazing 304.13.1
Guards for basement windows 304.17
Habitable rooms 402.1
Insect screens 304.14
Interior surface 305.3
Light 402
Openable windows 304.13.2
Toilet rooms 403.2
Ventilation 403
Weather tight 304.13
Window and door frames 304.13
WORKMANSHIP
General 102.5

PUBLICATE

INTERNATIONAL CODE COUNCIL®

Copyright © 2017 ICC. ALL RIGHTS RESERVED. Accessed by Ashley Stathatos (astathatos@annatexas.gov), (-) Order Number #100879786 on May 06, 2020 08:14 AM (PDT) pursuant to License Agreement with ICC. No further reproduction, no further reproductions by any third party, or distribution authorized. Single user only, copying and networking prohibited. ANY UNAUTHORIZED REPRODUCTION OR DISTRIBUTION IS A VIOLATION OF THE FEDERAL COPYRIGHT ACT AND THE LICENSE AGREEMENT, AND SUBJECT TO CIVIL AND CRIMINAL PENALTIES THEREUNDER.

100879786

DUPLICATE

Copyright © 2017 ICC. ALL RIGHTS RESERVED. Accessed by Ashley Stathatos (astathatos@annatexas.gov), (-) Order Number #100879786 on May 06, 2020 08:14 AM (PDT) pursuant to License Agreement with ICC. No further reproduction, no further reproductions by any third party, or distribution authorized. Single user only, copying and networking prohibited. ANY UNAUTHORIZED REPRODUCTION OR DISTRIBUTION IS A VIOLATION OF THE FEDERAL COPYRIGHT ACT AND THE LICENSE AGREEMENT, AND SUBJECT TO CIVIL AND CRIMINAL PENALTIES THEREUNDER.

EDITORIAL CHANGES – SECOND PRINTING

Page 9, **[BG] DWELLING UNIT**: title now reads . . . **[A] DWELLING UNIT.**

Page 10, **HISTORIC BUILDING**: title now reads . . . **[A] HISTORIC BUILDING.**

Page 10, **PERSON**: title now reads . . . **[A] PERSON.**

Page 10, **[BG] SLEEPING UNT**: title now reads . . . **[A] SLEEPING UNT.**

For the complete errata history of this code, please visit: https://www.iccsafe.org/errata-central/

DUPLICATE

INTERNATIONAL CODE COUNCIL®

Copyright © 2017 ICC. ALL RIGHTS RESERVED. Accessed by Ashley Stathatos (astathatos@annatexas.gov), (-) Order Number #100879786 on May 06, 2020 08:14 AM (PDT) pursuant to License Agreement with ICC. No further reproduction, no further reproductions by any third party, or distribution authorized. Single user only, copying and networking prohibited. ANY UNAUTHORIZED REPRODUCTION OR DISTRIBUTION IS A VIOLATION OF THE FEDERAL COPYRIGHT ACT AND THE LICENSE AGREEMENT, AND SUBJECT TO CIVIL AND CRIMINAL PENALTIES THEREUNDER.

100879786

DUPLICATE

Copyright © 2017 ICC. ALL RIGHTS RESERVED. Accessed by Ashley Stathatos (astathatos@annatexas.gov), (-) Order Number #100879786 on May 06, 2020 08:14 AM (PDT) pursuant to License Agreement with ICC. No further reproduction, no further reproductions by any third party, or distribution authorized. Single user only, copying and networking prohibited. ANY UNAUTHORIZED REPRODUCTION OR DISTRIBUTION IS A VIOLATION OF THE FEDERAL COPYRIGHT ACT AND THE LICENSE AGREEMENT, AND SUBJECT TO CIVIL AND CRIMINAL PENALTIES THEREUNDER.

ICC INTERNATIONAL CODE COUNCIL®

People Helping People Build a Safer World®

BENEFITS THAT WORK FOR YOU

No matter where you are in your building career, put the benefits of ICC Membership to work for you!

Membership in ICC connects you to exclusive I-Codes resources, continuing education opportunities and *Members-Only* benefits that include:

- Free code opinions from I-Codes experts
- Free I-Code book(s) or download to new Members*
- Discounts on I-Code resources, training and certification renewal
- Posting resumes and job search openings through the ICC Career Center
- Mentoring programs and valuable networking opportunities at ICC events
- Free benefits — Corporate and Governmental Members: Your staff can receive free ICC benefits too*
- *Savings of up to 25% on code books and training materials and more*

Put the benefits of ICC Membership to work for you and your career. **Visit www.iccsafe.org/**mem3 **to join now or to renew your Membership.** Or call 1-888-ICC-SAFE (422-7233), ext. 33804 to learn more today!

* Some restrictions apply. Speak with an ICC Member Services Representative for details.

16-12897

INTERNATIONAL CODE COUNCIL®

Copyright © 2017 ICC. ALL RIGHTS RESERVED. Accessed by Ashley Stathatos (astathatos@annatexas.gov), (-) Order Number #100879786 on May 06, 2020 08:14 AM (PDT) pursuant to License Agreement with ICC. No further reproduction, no further reproductions by any third party, or distribution authorized. Single user only, copying and networking prohibited. ANY UNAUTHORIZED REPRODUCTION OR DISTRIBUTION IS A VIOLATION OF THE FEDERAL COPYRIGHT ACT AND THE LICENSE AGREEMENT, AND SUBJECT TO CIVIL AND CRIMINAL PENALTIES THEREUNDER.

ICC Plan Review Services... For the most detailed and precise Plan Reviews in the industry

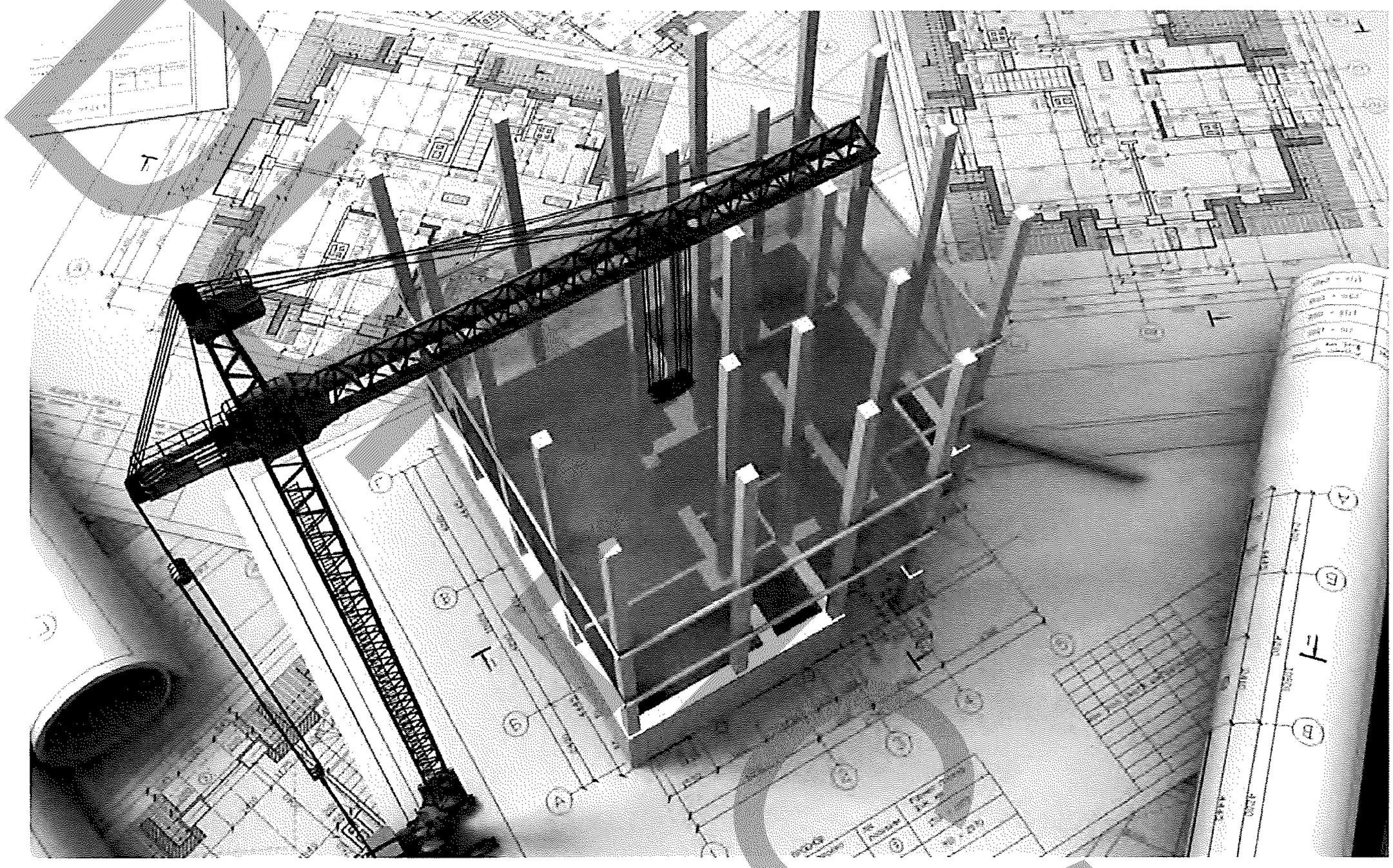

Ever wonder why code officials, architects and other building professionals value and accept ICC plan reviews?

- ***Experience*** – *Our I-Code experts have expertise in* ***ALL*** *the International Codes® (I-Codes®)*
- ***Detailed Report*** – *identifies code deficiencies found*
- ***Complimentary re-review of reissued plans****

Plus, ICC Plan Review Services has over 200 years of combined experience with applications of the codes, 6 registered design professionals on staff and 120 International Code Council Certifications, so you can be assured that ICC will deliver the most detailed and precise plan reviews in the industry.

**Applies to "Complete Plan Review Services". Contact ICC Plan Review staff for details.*

To get your plan review started now or to learn about disciplines reviewed, plan review options and more, visit **www.iccsafe.org/plr4** or call **888-422-7233, x5577.**

17-14096

INTERNATIONAL CODE COUNCIL®

Copyright © 2017 ICC. ALL RIGHTS RESERVED. Accessed by Ashley Stathatos (astathatos@annatexas.gov), (-) Order Number #100879786 on May 06, 2020 08:14 AM (PDT) pursuant to License Agreement with ICC. No further reproduction, no further reproductions by any third party, or distribution authorized. Single user only, copying and networking prohibited. ANY UNAUTHORIZED REPRODUCTION OR DISTRIBUTION IS A VIOLATION OF THE FEDERAL COPYRIGHT ACT AND THE LICENSE AGREEMENT, AND SUBJECT TO CIVIL AND CRIMINAL PENALTIES THEREUNDER.

ICC INTERNATIONAL CODE COUNCIL®

People Helping People Build a Safer World®

Looking for the missing piece?

Solve the puzzle and advance your career with ICC University

ICC University has been built from the ground up with you in mind.

Take advantage of tools to help you better track and manage your career growth and professional development, including automatic CEU tracking and simplified search options to find code training. Plan for your future and manage your professional development from one, easy-to-use location.

ICC University provides you with:

- Simplified access to over 300 training options
- Automatic CEU tracking to keep you on track for recertification
- Robust curriculums that identify supporting courses, publications and exam study materials to assist you in preparing for certification exams and achieving your next professional milestone
- The ability to purchase all courses, related publications and exam preparation materials – as well as register for certification exams – from a single screen
- And more!

www.iccsafe.org/ExploreICCU

17-14099

INTERNATIONAL CODE COUNCIL®

Copyright © 2017 ICC. ALL RIGHTS RESERVED. Accessed by Ashley Stathatos (astathatos@annatexas.gov), (-) Order Number #100879786 on May 06, 2020 08:14 AM (PDT) pursuant to License Agreement with ICC. No further reproduction, no further reproductions by any third party, or distribution authorized. Single user only, copying and networking prohibited. ANY UNAUTHORIZED REPRODUCTION OR DISTRIBUTION IS A VIOLATION OF THE FEDERAL COPYRIGHT ACT AND THE LICENSE AGREEMENT, AND SUBJECT TO CIVIL AND CRIMINAL PENALTIES THEREUNDER.

INTERNATIONAL CODE COUNCIL

People Helping People Build a Safer World®

Valuable Guides to Changes in the 2018 I-Codes®

NEW!

FULL COLOR! HUNDREDS OF PHOTOS AND ILLUSTRATIONS!

SIGNIFICANT CHANGES TO THE 2018 INTERNATIONAL CODES®

Practical resources that offer a comprehensive analysis of the critical changes made between the 2015 and 2018 editions of the codes. Authored by ICC code experts, these useful tools are "must-have" guides to the many important changes in the 2018 International Codes.

Key changes are identified then followed by in-depth, expert discussion of how the change affects real world application. A full-color photo, table or illustration is included for each change to further clarify application.

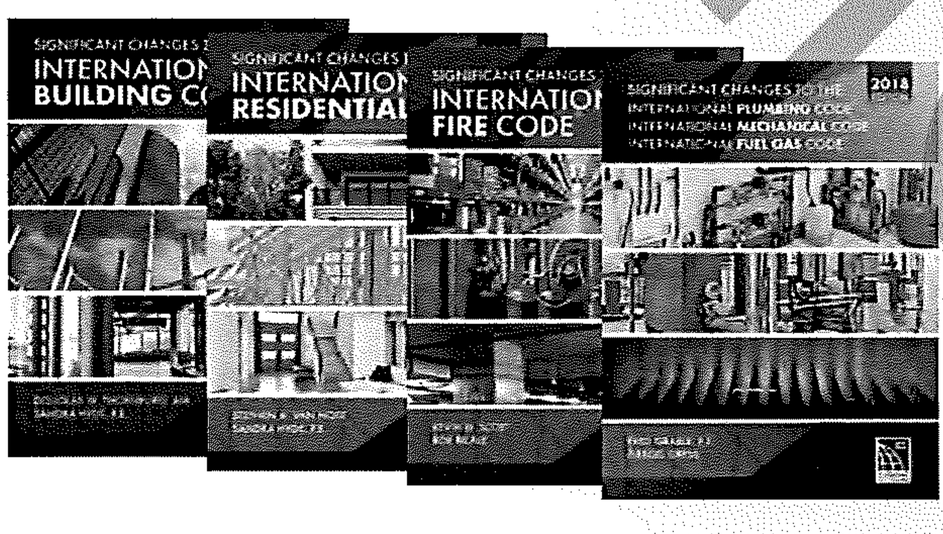

SIGNIFICANT CHANGES TO THE IBC, 2018 EDITION
#7024S18

SIGNIFICANT CHANGES TO THE IRC, 2018 EDITION
#7101S18

SIGNIFICANT CHANGES TO THE IFC, 2018 EDITION
#7404S18

SIGNIFICANT CHANGES TO THE IPC/IMC/IFGC, 2018 EDITION
#7202S18

ORDER YOUR HELPFUL GUIDES TODAY!

1-800-786-4452 | www.iccsafe.org/books

HIRE ICC TO TEACH

Want your group to learn the Significant Changes to the I-Codes from an ICC expert instructor? Schedule a seminar today!

email: **ICCTraining@iccsafe.org** | phone: **1-888-422-7233 ext. 33818**

17-14098

Copyright © 2017 ICC. ALL RIGHTS RESERVED. Accessed by Ashley Stathatos (astathatos@annatexas.gov), (-) Order Number #100879786 on May 06, 2020 08:14 AM (PDT) pursuant to License Agreement with ICC. No further reproduction, no further reproductions by any third party, or distribution authorized. Single user only, copying and networking prohibited. ANY UNAUTHORIZED REPRODUCTION OR DISTRIBUTION IS A VIOLATION OF THE FEDERAL COPYRIGHT ACT AND THE LICENSE AGREEMENT, AND SUBJECT TO CIVIL AND CRIMINAL PENALTIES THEREUNDER.